STEAM SYSTEM VALVES



Fuchen intelligent Equipment (Hangzhou) Co., Ltd.

COMPANY INTRODUCTION

Fuchen Intelligent Equipment (Hangzhou) Co., Ltd. is a manufacturer and distributor for multiple brands in China. Located in the beautiful city of Hangzhou, Zhejiang, Fuchen Intelligent Equipment specializes in steam system energy-saving solutions, system optimization, and the professional manufacturing, sales, and technical services of high-quality steam valves.

Fuchen Intelligent Manufacturing has always considered environmental protection and energy conservation as its corporate social responsibility. For many years, we have focused on providing customers with steam system energy-saving solutions and system optimization, accumulating extensive experience in large-scale steam system optimization and energy-saving projects, and offering a one-stop service concept. Currently, the company has become a partner of numerous Fortune 500 companies, with a client base covering various industries including automotive, steel, food and beverage, chemical, power plants, pharmaceuticals, textiles, rubber, feed, leather, hospitals, schools, and buildings.

After years of solid exploration and accumulation from theoretical to practical application, Fuchen Intelligent Manufacturing has completed precise market research on steam room doors, gained a deep understanding of enterprise product needs, and absorbed the design and manufacturing concepts of steam room doors, establishing its long-term position as a brand-name steam valve manufacturer. We have a single goal: to promote the spirit of craftsmanship and produce high-quality valves. To this end, we adhere to international standards, striving for excellence in every step, from R&D to production and final inspection, to ensure that every product is a top-quality product.

Fuchen Intelligent Manufacturing upholds the spirit of daily improvement and strives to create greater economic benefits for more companies through steam system optimization and energy conservation. We provide high-quality, cost-effective products to reduce production costs for businesses, and strive to achieve win-win cooperation, common development, shared energy-saving knowledge, and a green and environmentally friendly social environment.

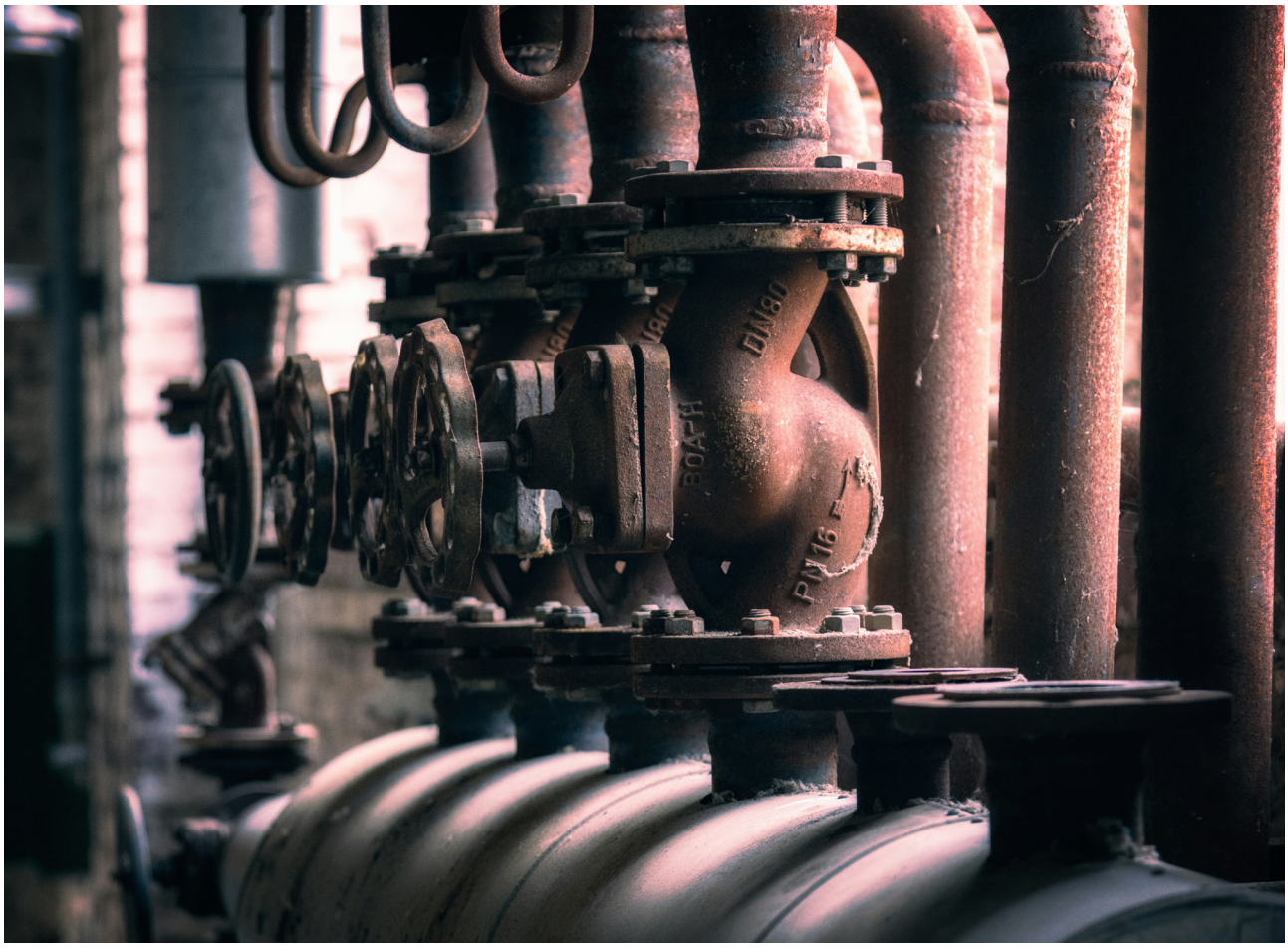

Design, materials, weights, and performance specifications are approximate and subject to change without notice. Please contact us for the latest information.

Fuchen intelligent Equipment (Hangzhou) Co., Ltd.
Tel:0571-82917716 Fax:0571-82917706
E-mail:fuchen@fuchensteam.com www.fuchensteam.com

PHOTO SHOW

















Fuchen intelligent Equipment (Hangzhou) Co., Ltd.
Tel:0571-82917716 Fax:0571-82917706
E-mail:fuchen@fuchensteam.com www.fuchensteam.com

PRODUCT CATALOG

1. Company Introduction----------2
2. Inverted Bucket Steam Trap----------5
3. Float Steam Trap----------12
4. Bimetallic Steam Trap----------28
5. Thermodynamic Steam Trap----------34
6. Condensate Recovery Pump----------37
7. Pressure Reducing Valve----------41
8. Control Valve----------48
9. Safety Valve----------53
10. Bellows Globe Valve----------63
11. Ball Valve----------66
12. Strainer----------71
13. Separator----------79
14. Check Valve----------82
15. Air Vent----------84
16. Vacuum Breaker----------87
17. Flash Tank----------89
18. Sight Glass----------91
19. Pressure Gauge----------93
20. Engineering Data and Drawings-----95



Design, materials, weights, and performance specifications are approximate and subject to change without notice. Please contact us for the latest information.

Fuchen intelligent Equipment (Hangzhou) Co., Ltd.
Tel:0571-82917716 Fax:0571-82917706
E-mail:fuchen@fuchensteam.com www.fuchensteam.com

Inverted Bucket Steam Trap

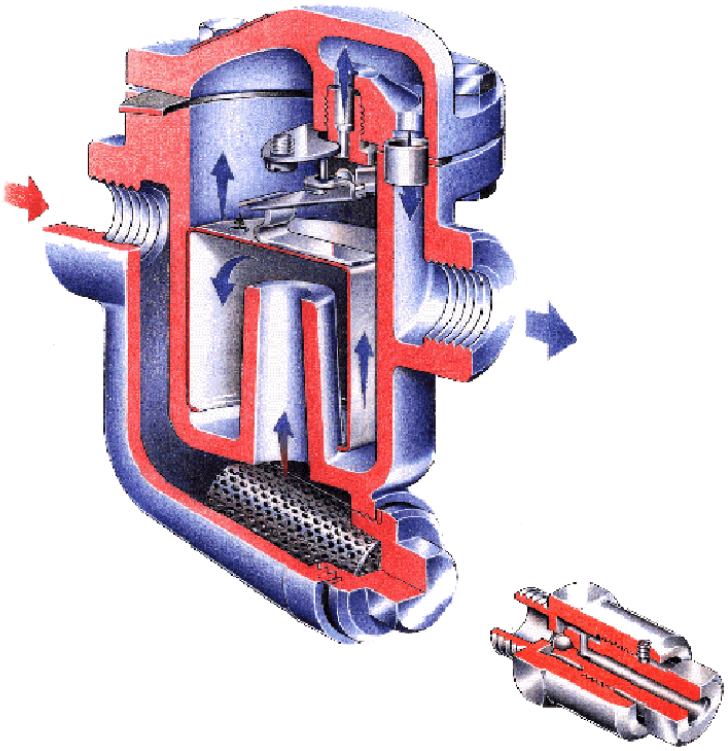

Fuchen intelligent Equipment (Hangzhou) Co., Ltd.
Tel:0571-82917716 Fax:0571-82917706
E-mail:fuchen@fuchensteam.com www.fuchensteam.com

981-985 Screwed



Product Description

1.Cobalt-chromium-tungsten alloy sealing surface for long service life. The valve seat and spherical valve core are made of high-quality alloy, resistant to wear and corrosion, and durable.
2.The spherical valve core is ground and mechanically aligned with the valve seat, ensuring excellent sealing performance, zero concentrated wear, and a long service life.
3.Excellent air exhaust performance. Overflow vents are located on the inverted barrel to effectively prevent steam lock and air blockage.
4.Allowable back pressure ratio (90%).
5.Water hammer resistance: The open barrel structure is protected from water hammer.
6.Easy maintenance: Internal parts are made of stainless steel, mounted on the valve cover, and equipped with a strainer device for simple routine maintenance.

Installation Notes

1. Proper installation and maintenance of this valve are the only guarantee of safe and proper operation.
2. Verify that the valve body material, maximum pressure, and maximum temperature meet the operating conditions.
3. Clean the pipeline and remove any debris before installation.
4. The valve should be installed horizontally at the lowest point in the pipeline, with the flow direction consistent with the direction marked on the valve body.
5. Each heating device should have its own steam trap to prevent interference.
6. Once the system is operating safely, slowly open the valve in front of the steam trap to allow the temperature to gradually rise to normal.
7. Perform regular maintenance to ensure the proper function of the steam trap.

Material

Valve body, valve cover:GGG40
Main valve seat and valve core: SS304 + STL/440C
Bucket, sliding plate, strainer: SS304
Check valve: SS304
Sealing gasket: Graphite composite gasket/non-asbestos gasket

Body Nominal Pressure and Max Operating Temp.

Valve body design pressure: PN16
Ductile iron ≤ 232°C

Size and Connection

DN15-DN50 Screwed (BSP, BSPT, NPT, etc.)

Maximum Operating Pressure Difference

16bar g

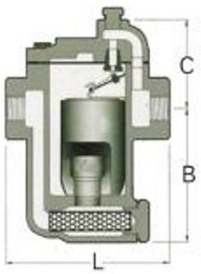

Model	DN	L mm	B mm	C mm	Weight kg
981	15-25	130	100	76	2.9
982	20-32	170	137	96	7.2
983	25-40	200	193	121	13.8
984	32-50	230	212	150	20
985	40-50	250	248	148	26

Displacement diagram

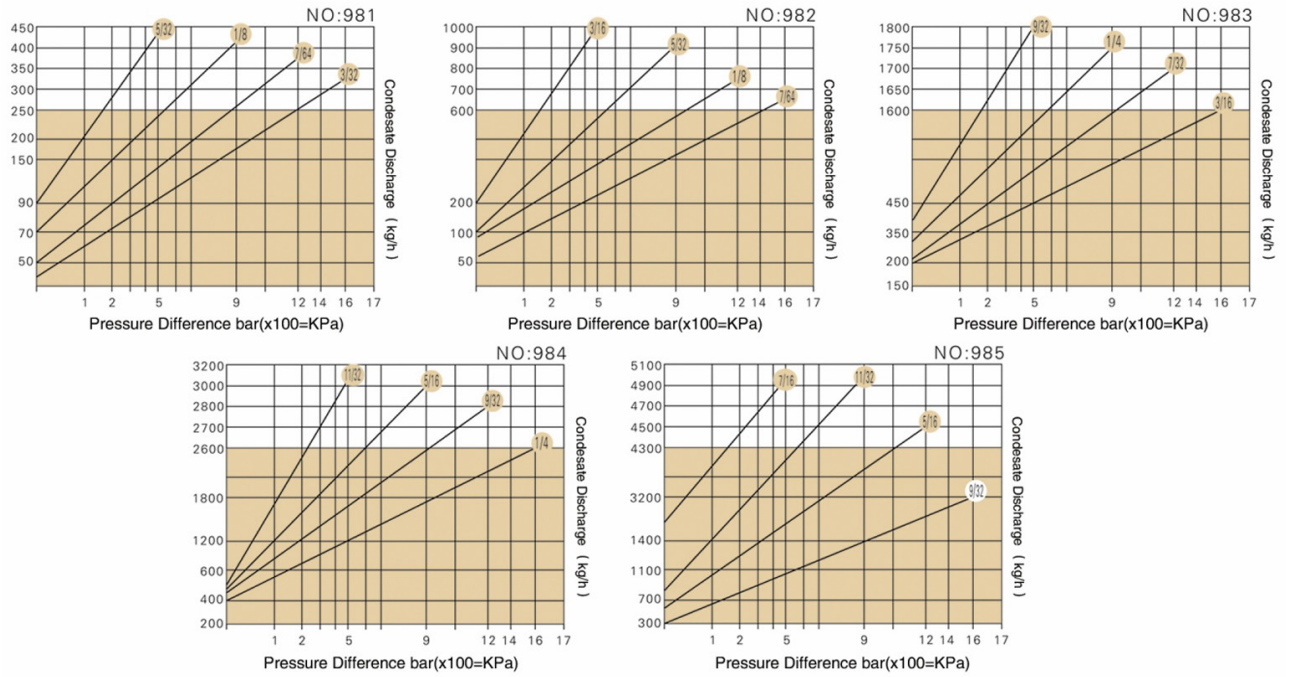

Design, materials, weights, and performance specifications are approximate and subject to change without notice. Please contact us for the latest information.

Fuchen intelligent Equipment (Hangzhou) Co., Ltd.
Tel:0571-82917716 Fax:0571-82917706
E-mail:fuchen@fuchensteam.com www.fuchensteam.com

991-996 Flanged



Product Description

1.Cobalt-chromium-tungsten alloy sealing surface for long service life. The valve seat and spherical valve core are made of high-quality alloy, resistant to wear and corrosion, and durable.
2.The spherical valve core is ground and mechanically aligned with the valve seat, ensuring excellent sealing performance, zero concentrated wear, and a long service life.
3.Excellent air exhaust performance. Overflow vents are located on the inverted barrel to effectively prevent steam lock and air blockage.
4.Allowable back pressure ratio (90%).
5.Water hammer resistance: The open barrel structure is protected from water hammer.
6.Easy maintenance: Internal parts are made of stainless steel, mounted on the valve cover, and equipped with a strainer device for simple routine maintenance.

Installation Notes

1. Proper installation and maintenance of this valve are the only guarantee of safe and proper operation.
2. Verify that the valve body material, maximum pressure, and maximum temperature meet the operating conditions.
3. Clean the pipeline and remove any debris before installation.
4. The valve should be installed horizontally at the lowest point in the pipeline, with the flow direction consistent with the direction marked on the valve body.
5. Each heating device should have its own steam trap to prevent interference.
6. Once the system is operating safely, slowly open the valve in front of the steam trap to allow the temperature to gradually rise to normal.
7. Perform regular maintenance to ensure the proper function of the steam trap.

Material

Valve body, valve cover:GGG40
Main valve seat and valve core: SS304 + STL/440C
Bucket, sliding plate, strainer: SS304
Check valve: SS304
Sealing gasket: Graphite composite gasket/non-asbestos gasket

Body Nominal Pressure and Max Operating Temp.

Valve body design pressure: PN16
Ductile iron ≤ 232°C

Size and Connection

DN15-DN100 flanged PN16
*Customizable flange standards such as ANSI 150 / JIS 10K

Maximum Operating Pressure Difference

16bar g

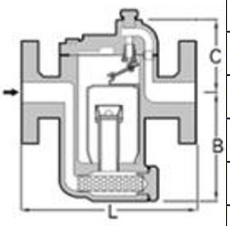

Model	DN	L mm	B mm	C mm	Weight kg
991	15-25	170	100	76	4.7
992	20-32	218	137	94	9.5
992	40-50	225	137	94	11.9
993	25-50	253	193	121	17.6
994	32-50	279	212	150	24.6
995	40-80	304	248	148	30.7
996	50-100	374	256	214	46.0

Displacement diagram

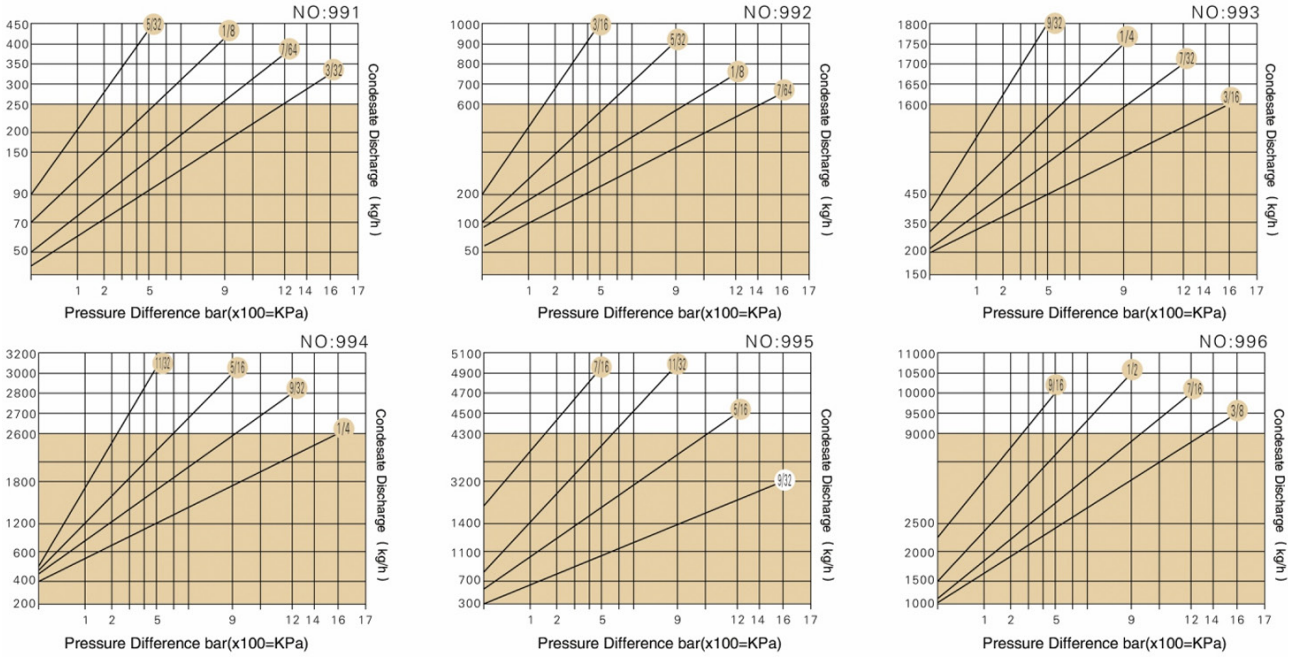

Design, materials, weights, and performance specifications are approximate and subject to change without notice. Please contact us for the latest information.

Fuchen intelligent Equipment (Hangzhou) Co., Ltd.
Tel:0571-82917716 Fax:0571-82917706
E-mail:fuchen@fuchensteam.com www.fuchensteam.com

881-885 Screwed



Product Description

1.Cobalt-chromium-tungsten alloy sealing surface for long service life. The valve seat and spherical valve core are made of high-quality alloy, resistant to wear and corrosion, and durable.
2.The spherical valve core is ground and mechanically aligned with the valve seat, ensuring excellent sealing performance, zero concentrated wear, and a long service life.
3.Excellent air exhaust performance. Overflow vents are located on the inverted barrel to effectively prevent steam lock and air blockage.
4.Allowable back pressure ratio (90%).
5.Water hammer resistance: The open barrel structure is protected from water hammer.
6.Easy maintenance: Internal parts are made of stainless steel, mounted on the valve cover, and equipped with a strainer device for simple routine maintenance.

Installation Notes

1. Proper installation and maintenance of this valve are the only guarantee of safe and proper operation.
2. Verify that the valve body material, maximum pressure, and maximum temperature meet the operating conditions.
3. Clean the pipeline and remove any debris before installation.
4. The valve should be installed horizontally at the lowest point in the pipeline, with the flow direction consistent with the direction marked on the valve body.
5. Each heating device should have its own steam trap to prevent interference.
6. Once the system is operating safely, slowly open the valve in front of the steam trap to allow the temperature to gradually rise to normal.
7. Perform regular maintenance to ensure the proper function of the steam trap.

Material

Valve body, valve cover:WCB/SS304
Main valve seat and valve core: SUS420/SS304+STL
Bucket, sliding plate, strainer: SS304
Check valve: SS304+hastelloy
Sealing gasket: Graphite composite gasket

Body Nominal Pressure and Max Operating Temp.

Valve body design pressure: PN16/PN25/PN40
Cast Steel ≤ 350°C

Size and Connection

DN15-DN50 Screwed (BSP, BSPT, NPT, etc.)

Maximum Operating Pressure Difference

30bar g

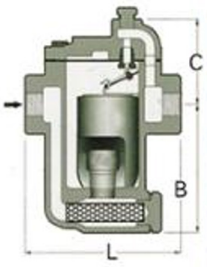

Model	DN	L mm	B mm	C mm	Weight kg
881	15–25	130	100	76	3. 3
882	20–32	170	137	96	7. 4
883	25–32	220	193	121	13. 0
883	40–50	270	193	121	15. 0
884	25–32	235	212	150	21. 0
884	40–50	300	212	150	23. 0
885	40–50	320	248	148	28. 0

Displacement diagram

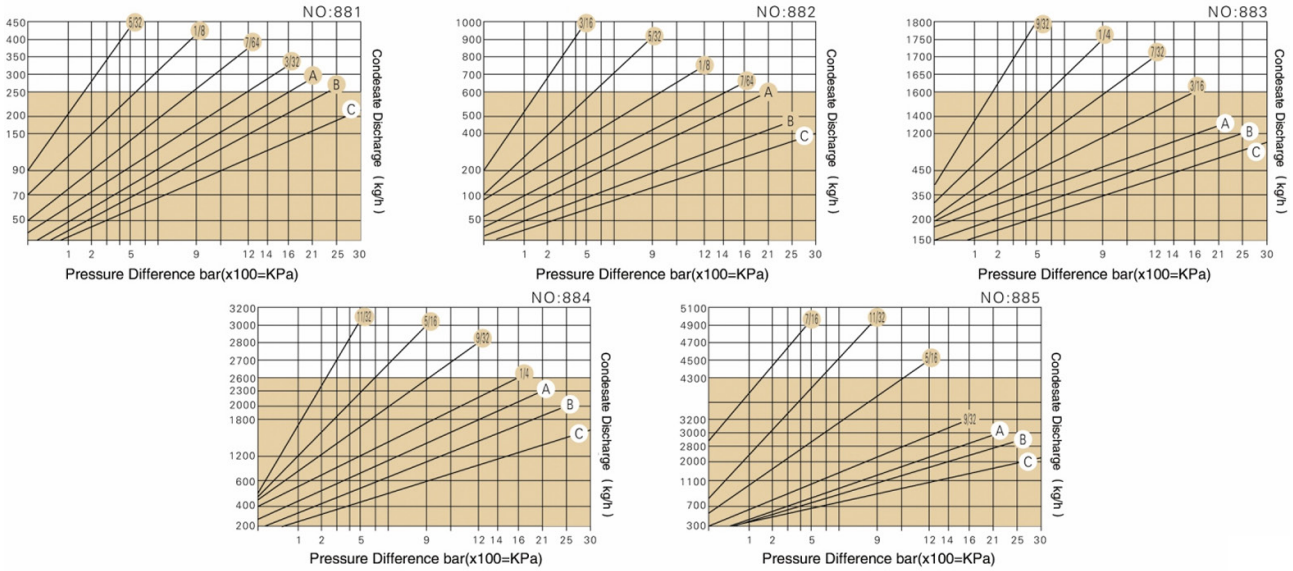

Design, materials, weights, and performance specifications are approximate and subject to change without notice. Please contact us for the latest information.

Fuchen intelligent Equipment (Hangzhou) Co., Ltd.
Tel:0571-82917716 Fax:0571-82917706
E-mail:fuchen@fuchensteam.com www.fuchensteam.com

681-996 Flanged



Product Description

1.Cobalt-chromium-tungsten alloy sealing surface for long service life. The valve seat and spherical valve core are made of high-quality alloy, resistant to wear and corrosion, and durable.
2.The spherical valve core is ground and mechanically aligned with the valve seat, ensuring excellent sealing performance, zero concentrated wear, and a long service life.
3.Excellent air exhaust performance. Overflow vents are located on the inverted barrel to effectively prevent steam lock and air blockage.
4.Allowable back pressure ratio (90%).
5.Water hammer resistance: The open barrel structure is protected from water hammer.
6.Easy maintenance: Internal parts are made of stainless steel, mounted on the valve cover, and equipped with a strainer device for simple routine maintenance.

Installation Notes

1. Proper installation and maintenance of this valve are the only guarantee of safe and proper operation.
2. Verify that the valve body material, maximum pressure, and maximum temperature meet the operating conditions.
3. Clean the pipeline and remove any debris before installation.
4. The valve should be installed horizontally at the lowest point in the pipeline, with the flow direction consistent with the direction marked on the valve body.
5. Each heating device should have its own steam trap to prevent interference.
6. Once the system is operating safely, slowly open the valve in front of the steam trap to allow the temperature to gradually rise to normal.
7. Perform regular maintenance to ensure the proper function of the steam trap.

Material

Valve body, valve cover:WCB/SS304
Main valve seat and valve core: SS304 + STL/440C
Bucket, sliding plate, strainer: SS304
Check valve: SS304
Sealing gasket: Graphite composite gasket/non-asbestos gasket

Body Nominal Pressure and Max Operating Temp.

Valve body design pressure: PN16/PN25/PN40
Cast Steel ≤ 350°C

Size and Connection

DN15-DN100 Flanged PN16/PN25/PN40
*Customizable flange standards such as ANSI 150/300 / JIS 10K/20K

Maximum Operating Pressure Difference

30bar g

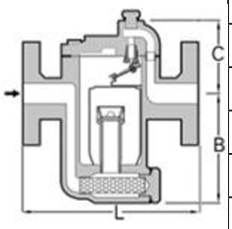

Model	DN	L mm	B mm	C mm	Weight kg
681F	15–20	150	76	100	5
681F	25	160	76	100	5
682F	20–25	220	96	137	9
682F	32–50	250	96	137	13
883F	25–50	255	121	193	15
884F	32–50	280	150	213	25
885F	40–50	310	148	248	30
996F	40–65	374	214	256	45
996F	80–100	420	214	256	48

Displacement diagram

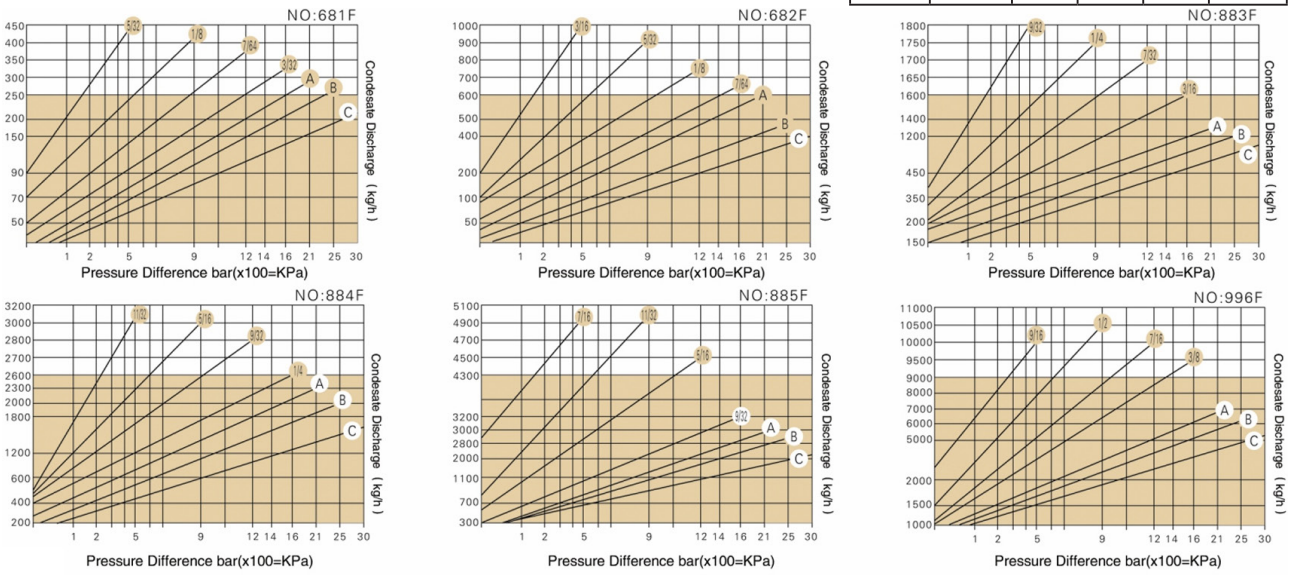

Fuchen intelligent Equipment (Hangzhou) Co., Ltd.
Tel:0571-82917716 Fax:0571-82917706
E-mail:fuchen@fuchensteam.com www.fuchensteam.com

SBT11A



Material

Valve body and bonnet: SS304/SS316
Valve seat and disc: Martensitic stainless steel
Other internal components: Austenitic stainless steel

Valve Body Nominal Pressure and Maximum Operating Temperature

Valve body design pressure: PN16
Stainless steel ≤ 350°C

Specifications and Connections

DN15-DN25 Flanged PN25

Maximum Steam Trap Operating Pressure Differential

16bar g

Product Description

1.The inverted bucket steam trap operates on the density difference between vapor and liquid.
2.The valve body and bonnet are made entirely of stainless steel.
3.All internal components are made of stainless steel, and wear margins are fully considered in the design of moving parts, extending the service life of the steam trap.
4.An internal U-shaped stainless steel pipe flow channel provides a water seal.
5.A patented, reliable flexible shutoff system eliminates steam leakage.
6.An external strainer connector ensures the steam trap operates in a clean environment.
7.The back pressure rating is over 90%.

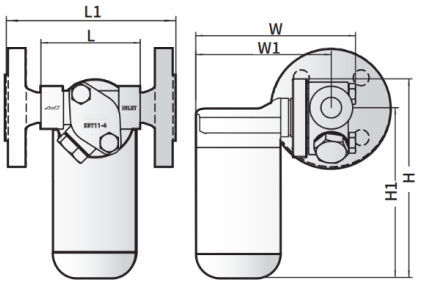

Size	L mm	L1 mm	W mm	W1 mm	H mm	H1 mm	Weight kg
DN15-25	88	210	152	130	176	150	6.1

Displacement diagram

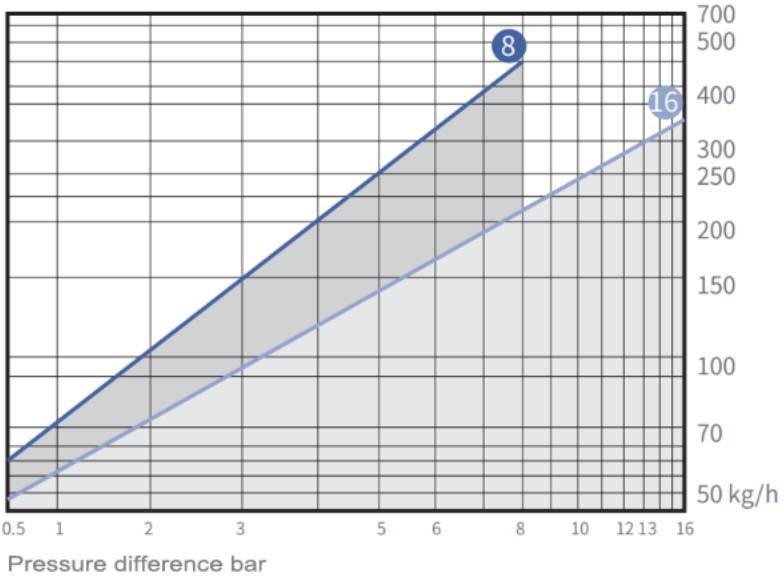

Design, materials, weights, and performance specifications are approximate and subject to change without notice. Please contact us for the latest information.

Fuchen intelligent Equipment (Hangzhou) Co., Ltd.
Tel:0571-82917716 Fax:0571-82917706
E-mail:fuchen@fuchensteam.com www.fuchensteam.com

SBT11TVS Trap Valve Station



Material

Valve body and bonnet: SS304/SS316
Valve seat and disc: Martensitic stainless steel
Other internal components: Austenitic stainless steel

Valve Body Nominal Pressure and Maximum Operating Temperature

Valve body design pressure: PN16
Stainless steel ≤ 350°C

Specifications and Connections

DN15-DN25 Flanged PN25

Maximum Steam Trap Operating Pressure Differential

16bar g

Product Description

1.The inverted bucket steam trap operates on the density difference between vapor and liquid.
2.The valve body and bonnet are made entirely of stainless steel.
3.All internal components are made of stainless steel, and wear margins are fully considered in the design of moving parts, extending the service life of the steam trap.
4.An internal U-shaped stainless steel pipe flow channel provides a water seal.
5.A patented, reliable flexible shutoff system eliminates steam leakage.
6.An external connector ensures the steam trap operates in a clean environment.
7.The back pressure rating is over 90%.

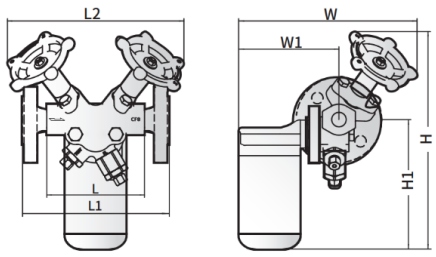

Size	L mm	L1 mm	L2 mm	W mm	W1 mm	H mm	H1 mm	Weight kg
DN15-25	90	200	220	230	132	266	160	7.6

Displacement diagram

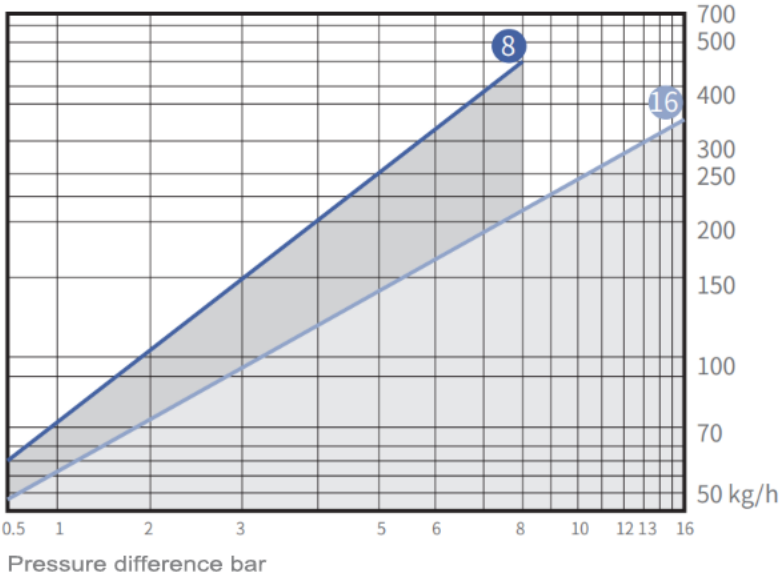

Fuchen intelligent Equipment (Hangzhou) Co., Ltd.
Tel:0571-82917716 Fax:0571-82917706
E-mail:fuchen@fuchensteam.com www.fuchensteam.com

Float Steam Trap

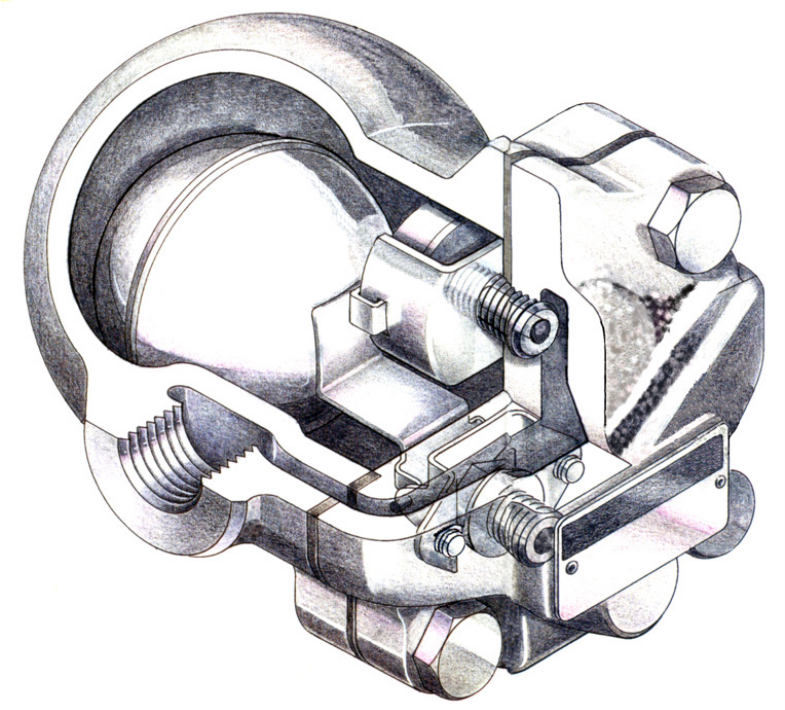

Design, materials, weights, and performance specifications are approximate and subject to change without notice. Please contact us for the latest information.

Fuchen intelligent Equipment (Hangzhou) Co., Ltd.
Tel:0571-82917716 Fax:0571-82917706
E-mail:fuchen@fuchensteam.com www.fuchensteam.com

FT14 Flanged



Material
Body and bonnet: GGG40
Main valve seat and valve core: SUS304/SS304+STL
Float and bracket: SS304
Exhaust valve assembly: SS304+Hastelloy
Sealing gasket: Graphite composite gasket

Valve Body Nominal Pressure and Maximum Operating Temperature
Valve body design pressure: PN16
Ductile iron ≤ 232°C

Specifications and Connections
DN15-DN25 flange connection, PN16
*Custom flange standards such as ANSI 150/JIS 10K are available.

Mounting Position
Horizontal installation: Right inlet, left outlet
Horizontal installation: Left inlet, right outlet
Vertical installation: Top inlet, bottom outlet

Maximum Steam Trap Operating Pressure Differential
16 bar g

Product Description
1. This valve provides rapid, timely, and continuous discharge of saturated condensate, ensuring no water accumulation within the heating equipment and achieving maximum heating efficiency.
2. The valve core and seat sealing surfaces are made of cobalt-chromium-tungsten alloy, which is wear-resistant, corrosion-resistant, and durable.
3. The seal utilizes a semi-spherical structure, which has been carefully matched and polished for excellent sealing performance.
4. The semi-spherical seal eliminates concentrated wear during operation and provides a long service life.
5. A float-driven lever automatically adjusts the opening of the drain valve seat, ensuring continuous operation and stable performance despite fluctuations in steam pressure.
6. The X-series element automatically drains non-condensable cold and hot gases, eliminating vapor lock and providing excellent non-condensable gas removal performance.
7. The drain valve seat is always below the condensate level, forming a water seal and preventing fresh steam leakage during operation.
8. Continuous condensate discharge with a smooth flow is particularly effective in condensate recovery systems.

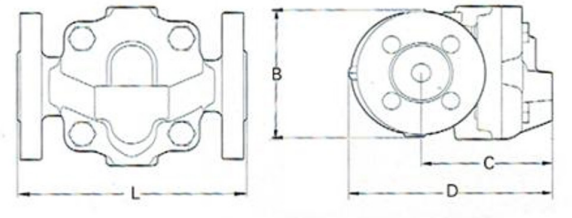

Size	L mm	B mm	C mm	D mm	Weight kg
DN15	150	108	101	152	5.0
DN20	150	108	101	156	5.1
DN25	160	126	70	170	6.3

Displacement diagram DN15-20/DN25

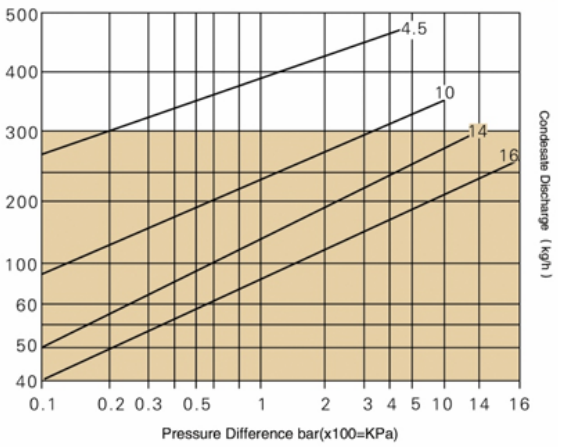

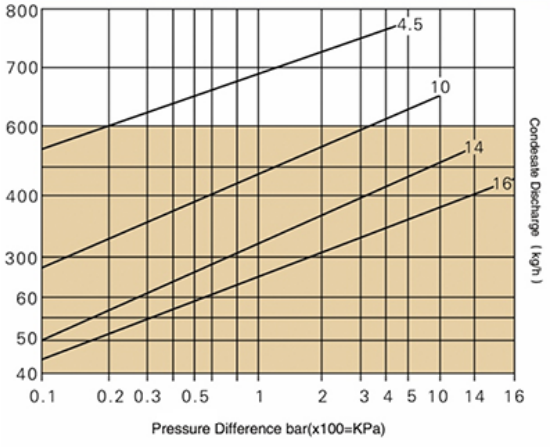

Design, materials, weights, and performance specifications are approximate and subject to change without notice. Please contact us for the latest information.
Fuchen intelligent Equipment (Hangzhou) Co., Ltd.
Tel:0571-82917716 Fax:0571-82917706
E-mail:fuchen@fuchensteam.com www.fuchensteam.com

FT14 Screwed



Material
Body and bonnet: GGG40
Main valve seat and valve core: SUS420/SS304 + STL
Float and bracket: SS304
Exhaust valve assembly: SS304 + Hastelloy
Sealing gasket: Graphite composite gasket

Valve Body Nominal Pressure and Maximum Operating Temperature
Valve body design pressure: PN16
Ductile iron ≤ 232°C

Specifications and Connections
DN15-DN25 BSP screwed
*Custom BSP, BSPT, NPT, and other options available

Mounting Position
Horizontal installation: Right inlet, left outlet
Horizontal installation: Left inlet, right outlet
Vertical installation: Top inlet, bottom outlet

Maximum Steam Trap Operating Pressure Differential
16 bar g

Product Description
1. This valve provides rapid, timely, and continuous discharge of saturated condensate, ensuring no water accumulation within the heating equipment and achieving maximum heating efficiency.
2. The valve core and seat sealing surfaces are made of cobalt-chromium-tungsten alloy, which is wear-resistant, corrosion-resistant, and durable.
3. The seal utilizes a semi-spherical structure, which has been carefully matched and polished for excellent sealing performance.
4. The semi-spherical seal eliminates concentrated wear during operation and provides a long service life.
5. A float-driven lever automatically adjusts the opening of the drain valve seat, ensuring continuous operation and stable performance despite fluctuations in steam pressure.
6. The X-series element automatically drains non-condensable cold and hot gases, eliminating vapor lock and providing excellent non-condensable gas removal performance.
7. The drain valve seat is always below the condensate level, forming a water seal and preventing fresh steam leakage during operation.
8. Continuous condensate discharge with a smooth flow is particularly effective in condensate recovery systems.

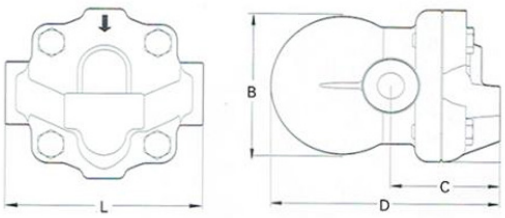

Size	L mm	B mm	C mm	D mm	Weight kg
DN15	120	96	67	147	3.3
DN20	120	96	67	147	3.3
DN25	145	117	75	166	4.3

Displacement diagram DN15-20/DN25

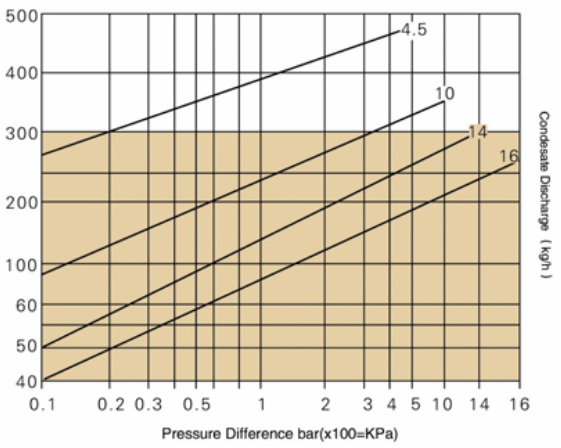

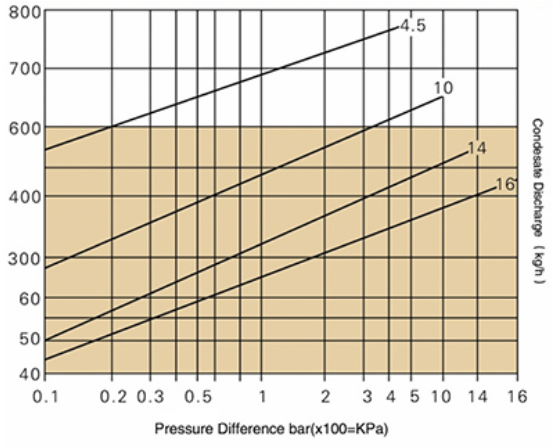

Design, materials, weights, and performance specifications are approximate and subject to change without notice. Please contact us for the latest information.

Fuchen intelligent Equipment (Hangzhou) Co., Ltd.
Tel:0571-82917716 Fax:0571-82917706
E-mail:fuchen@fuchensteam.com www.fuchensteam.com

FTGS14 Flanged



Material
Body and bonnet: SS304 + GGG40
Main valve seat and valve core: SUS420/SS304 + STL
Float and bracket: SS304
Exhaust valve block: SS304 + Hastelloy
Sealing gasket: Graphite composite gasket

Valve Body Nominal Pressure and Maximum Operating Temperature
Valve body design pressure: PN16
Ductile iron ≤ 232°C

Specifications and Connections
DN15-DN25 flange connection, PN16
*Customizable flange standards such as ANSI 150/JIS 10K

Mounting Position
Horizontal installation: Right inlet, left outlet
Horizontal installation: Left inlet, right outlet
Vertical installation: Top inlet, bottom outlet

Maximum Steam Trap Operating Pressure Differential
16 bar g

Product Description
1. This valve provides rapid, timely, and continuous discharge of saturated condensate, ensuring no water accumulation within the heating equipment and achieving maximum heating efficiency.
2. The valve core and seat sealing surfaces are made of cobalt-chromium-tungsten alloy, which is wear-resistant, corrosion-resistant, and durable.
3. The seal utilizes a semi-spherical structure, which has been carefully matched and polished for excellent sealing performance.
4. The semi-spherical seal eliminates concentrated wear during operation and provides a long service life.
5. A float-driven lever automatically adjusts the opening of the drain valve seat, ensuring continuous operation and stable performance despite fluctuations in steam pressure.
6. The X-series element automatically drains non-condensable cold and hot gases, eliminating vapor lock and providing excellent non-condensable gas removal performance.
7. The drain valve seat is always below the condensate level, forming a water seal and preventing fresh steam leakage during operation.
8. Continuous condensate discharge with a smooth flow is particularly effective in condensate recovery systems.

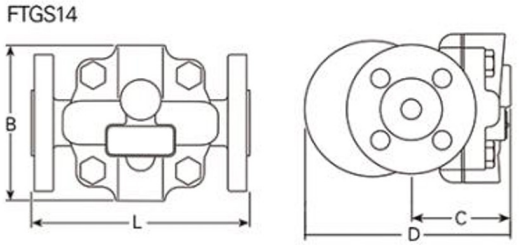

Size	L mm	B mm	C mm	D mm	Weight kg
DN15	150	107	102	153	4.8
DN20	150	107	102	155	5.2
DN25	160	125	65	165	6.5

Displacement diagram DN15-20/DN25

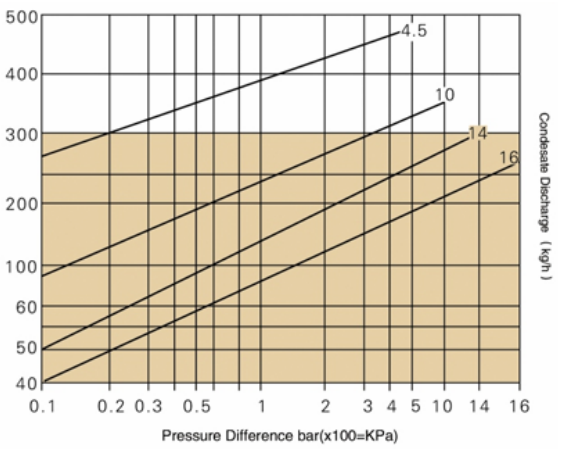

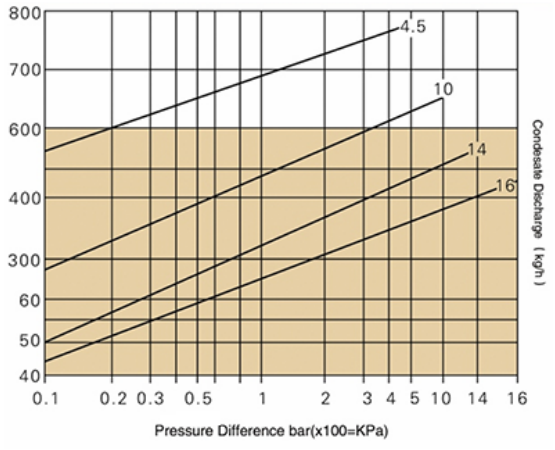

Design, materials, weights, and performance specifications are approximate and subject to change without notice. Please contact us for the latest information.

Fuchen intelligent Equipment (Hangzhou) Co., Ltd.
Tel:0571-82917716 Fax:0571-82917706
E-mail:fuchen@fuchensteam.com www.fuchensteam.com

FTGS14 Screwed



Material
Body and bonnet: SS304 + GGG40
Main valve seat and valve core: SUS420/SS304 + STL
Float and bracket: SS304
Exhaust valve block: SS304 + Hastelloy
Sealing gasket: Graphite composite gasket

Valve Body Nominal Pressure and Maximum Operating Temperature
Valve body design pressure: PN16
Ductile iron ≤ 232°C

Specifications and Connections
DN15-DN25 BSP screwed
*Custom BSP, BSPT, NPT, and other options available

Mounting Position
Horizontal installation: Right inlet, left outlet
Horizontal installation: Left inlet, right outlet
Vertical installation: Top inlet, bottom outlet

Maximum Steam Trap Operating Pressure Differential
16 bar g

Product Description
1. This valve provides rapid, timely, and continuous discharge of saturated condensate, ensuring no water accumulation within the heating equipment and achieving maximum heating efficiency.
2. The valve core and seat sealing surfaces are made of cobalt-chromium-tungsten alloy, which is wear-resistant, corrosion-resistant, and durable.
3. The seal utilizes a semi-spherical structure, which has been carefully matched and polished for excellent sealing performance.
4. The semi-spherical seal eliminates concentrated wear during operation and provides a long service life.
5. A float-driven lever automatically adjusts the opening of the drain valve seat, ensuring continuous operation and stable performance despite fluctuations in steam pressure.
6. The X-series element automatically drains non-condensable cold and hot gases, eliminating vapor lock and providing excellent non-condensable gas removal performance.
7. The drain valve seat is always below the condensate level, forming a water seal and preventing fresh steam leakage during operation.
8. Continuous condensate discharge with a smooth flow is particularly effective in condensate recovery systems.

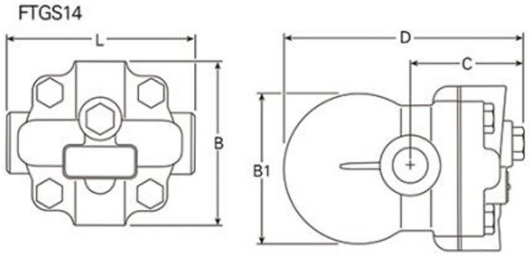

Size	L mm	B mm	B1 mm	C mm	D mm	Weight kg
DN15	120	107	96	80	160	3.4
DN20	120	107	96	80	160	3.4
DN25	145	117	117	70	162	4.4

Displacement diagram DN15-20/DN25

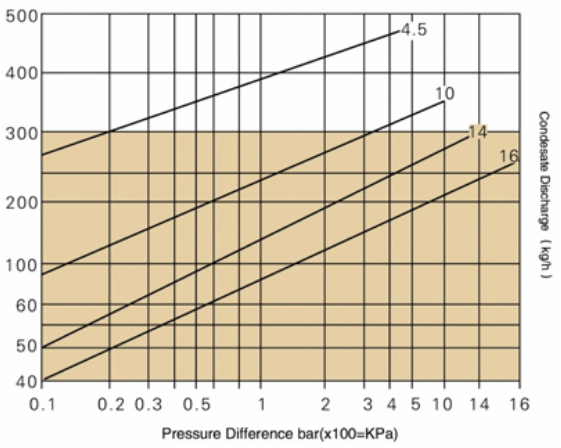

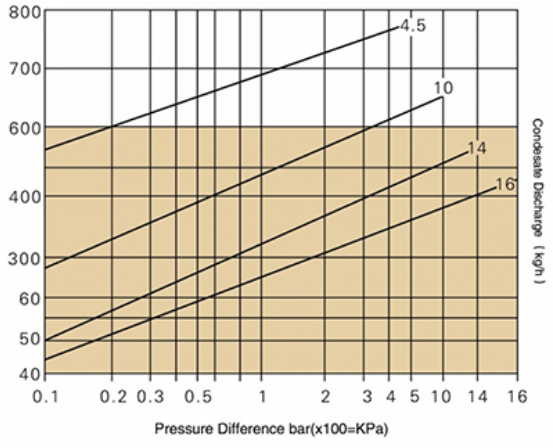

Design, materials, weights, and performance specifications are approximate and subject to change without notice. Please contact us for the latest information.

Fuchen intelligent Equipment (Hangzhou) Co., Ltd.
Tel:0571-82917716 Fax:0571-82917706
E-mail:fuchen@fuchensteam.com www.fuchensteam.com

FT44 Flanged



Material
Body and bonnet: WCB/SS304
Main valve seat and valve core: SUS420/SS304+STL
Float and bracket: SS304
Exhaust valve assembly: SS304+Hastelloy
Sealing gasket: Graphite composite gasket

Valve Body Nominal Pressure and Maximum Operating Temperature
Valve body design pressure: PN25
Cast steel/stainless steel ≤350°C

Specifications and Connections
DN15-DN25 flange connection, PN25
*Custom flange standards such as ANSI 150/JIS 10K are available.

Mounting Position
Horizontal installation: Right inlet, left outlet
Horizontal installation: Left inlet, right outlet
Vertical installation: Top inlet, bottom outlet

Maximum Steam Trap Operating Pressure Differential
21 bar g

Product Description
1. This valve provides rapid, timely, and continuous discharge of saturated condensate, ensuring no water accumulation within the heating equipment and achieving maximum heating efficiency.
2. The valve core and seat sealing surfaces are made of cobalt-chromium-tungsten alloy, which is wear-resistant, corrosion-resistant, and durable.
3. The seal utilizes a semi-spherical structure, which has been carefully matched and polished for excellent sealing performance.
4. The semi-spherical seal eliminates concentrated wear during operation and provides a long service life.
5. A float-driven lever automatically adjusts the opening of the drain valve seat, ensuring continuous operation and stable performance despite fluctuations in steam pressure.
6. The X-series element automatically drains non-condensable cold and hot gases, eliminating vapor lock and providing excellent non-condensable gas removal performance.
7. The drain valve seat is always below the condensate level, forming a water seal and preventing fresh steam leakage during operation.
8. Continuous condensate discharge with a smooth flow is particularly effective in condensate recovery systems.

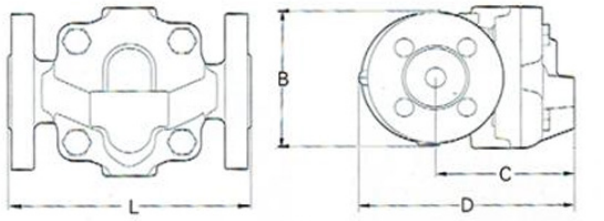

Size	L mm	B mm	C mm	D mm	Weight kg
DN15	170	108	101	152	5.0
DN20	170	108	101	156	5.5
DN25	160	126	70	170	6.5

Displacement diagram DN15-20/DN25

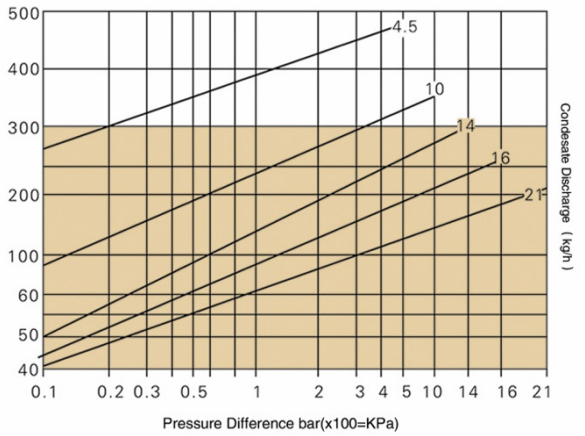

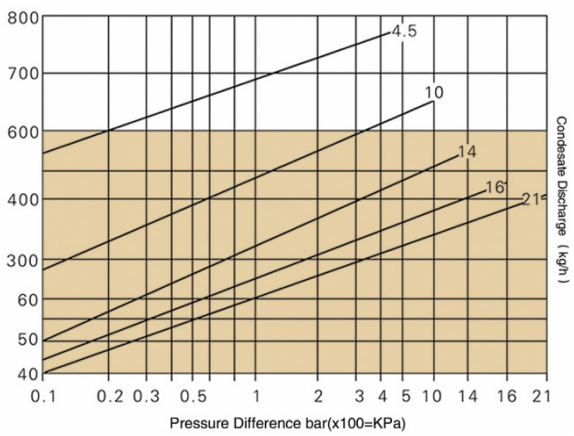

Fuchen intelligent Equipment (Hangzhou) Co., Ltd.
Tel:0571-82917716 Fax:0571-82917706
E-mail:fuchen@fuchensteam.com www.fuchensteam.com

FT44 Screwed



Material
Body and bonnet: WCB/SS304
Main valve seat and valve core: SUS420/SS304+STL
Float and bracket: SS304
Exhaust valve block: SS304+Hastelloy
Sealing gasket: Graphite composite gasket

Valve Body Nominal Pressure and Maximum Operating Temperature
Valve body design pressure: PN25
Cast steel/stainless steel ≤350°C

Specifications and Connections
DN15-DN25 BSP screwed
*Custom BSP, BSPT, NPT, and other options available

Mounting Position
Horizontal installation: Right inlet, left outlet
Horizontal installation: Left inlet, right outlet
Vertical installation: Top inlet, bottom outlet

Maximum Steam Trap Operating Pressure Differential
21 bar g

Product Description
1. This valve provides rapid, timely, and continuous discharge of saturated condensate, ensuring no water accumulation within the heating equipment and achieving maximum heating efficiency.
2. The valve core and seat sealing surfaces are made of cobalt-chromium-tungsten alloy, which is wear-resistant, corrosion-resistant, and durable.
3. The seal utilizes a semi-spherical structure, which has been carefully matched and polished for excellent sealing performance.
4. The semi-spherical seal eliminates concentrated wear during operation and provides a long service life.
5. A float-driven lever automatically adjusts the opening of the drain valve seat, ensuring continuous operation and stable performance despite fluctuations in steam pressure.
6. The X-series element automatically drains non-condensable cold and hot gases, eliminating vapor lock and providing excellent non-condensable gas removal performance.
7. The drain valve seat is always below the condensate level, forming a water seal and preventing fresh steam leakage during operation.
8. Continuous condensate discharge with a smooth flow is particularly effective in condensate recovery systems.

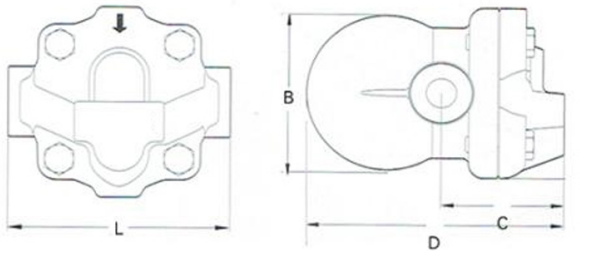

Size	L mm	B mm	C mm	D mm	Weight kg
DN15	120	96	67	147	3.0
DN20	120	96	67	147	3.0
DN25	145	117	75	166	4.3

Displacement diagram DN15-20/DN25

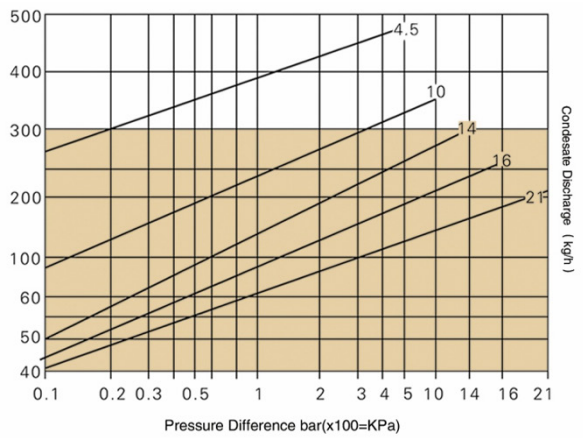

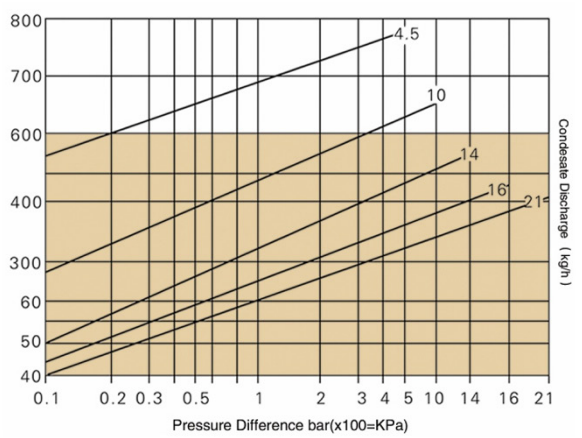

Design, materials, weights, and performance specifications are approximate and subject to change without notice. Please contact us for the latest information.

Fuchen intelligent Equipment (Hangzhou) Co., Ltd.
Tel:0571-82917716 Fax:0571-82917706
E-mail:fuchen@fuchensteam.com www.fuchensteam.com

FT43-III Flanged



Product Description

1. This valve provides rapid, timely, and continuous discharge of saturated condensate, ensuring no water accumulation within the heating equipment and achieving maximum heating efficiency.
2. The valve core and seat sealing surfaces are made of cobalt-chromium-tungsten alloy, which is wear-resistant, corrosion-resistant, and durable.
3. The seal utilizes a semi-spherical structure, which has been carefully matched and polished for excellent sealing performance.
4. The semi-spherical seal eliminates concentrated wear during operation and provides a long service life.
5. A float-driven lever automatically adjusts the opening of the drain valve seat, ensuring continuous operation and stable performance despite fluctuations in steam pressure.
6. The X-series element automatically drains non-condensable cold and hot gases, eliminating vapor lock and providing excellent non-condensable gas removal performance.
7. The drain valve seat is always below the condensate level, forming a water seal and preventing fresh steam leakage during operation.
8. Continuous condensate discharge with a smooth flow is particularly effective in condensate recovery systems.

Material

Body and bonnet: GGG40
Main valve seat and valve core: SUS420/SS304 + STL
Float and bracket: SS304
Exhaust valve block: SS304 + Hastelloy
Sealing gasket: Graphite composite gasket

Valve Body Nominal Pressure and Maximum Operating Temperature

Valve body design pressure: PN16
Ductile iron ≤ 232°C

Specifications and Connections

DN15-DN50 flange connection, PN16
*Custom flange standards such as ANSI 150/JIS 10K are available.

Mounting Position

Horizontal installation: Right inlet, left outlet
Horizontal installation: Left inlet, right outlet
Vertical installation: Top inlet, bottom outlet

Maximum Steam Trap Operating Pressure Differential

16 bar g

Displacement diagram

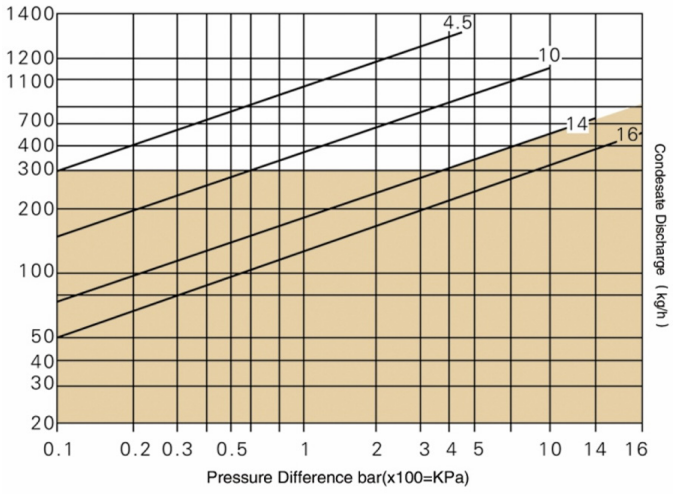

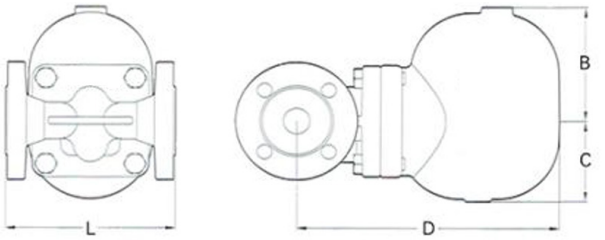

Size	L mm	B mm	C mm	D mm	Weight kg
DN15	160	111	78	245	9.8
DN20	160	111	78	245	9.8
DN25	160	111	78	245	10.6
DN32	230	111	78	245	11.8
DN40	230	111	78	245	12.5
DN50	230	111	78	245	12.8

Fuchen intelligent Equipment (Hangzhou) Co., Ltd.
Tel:0571-82917716 Fax:0571-82917706
E-mail:fuchen@fuchensteam.com www.fuchensteam.com

FT14HC-III Screwed



Product Description

1. This valve provides rapid, timely, and continuous discharge of saturated condensate, ensuring no water accumulation within the heating equipment and achieving maximum heating efficiency.
2. The valve core and seat sealing surfaces are made of cobalt-chromium-tungsten alloy, which is wear-resistant, corrosion-resistant, and durable.
3. The seal utilizes a semi-spherical structure, which has been carefully matched and polished for excellent sealing performance.
4. The semi-spherical seal eliminates concentrated wear during operation and provides a long service life.
5. A float-driven lever automatically adjusts the opening of the drain valve seat, ensuring continuous operation and stable performance despite fluctuations in steam pressure.
6. The X-series element automatically drains non-condensable cold and hot gases, eliminating vapor lock and providing excellent non-condensable gas removal performance.
7. The drain valve seat is always below the condensate level, forming a water seal and preventing fresh steam leakage during operation.
8. Continuous condensate discharge with a smooth flow is particularly effective in condensate recovery systems.

Material

Body and bonnet: GGG40
Main valve seat and valve core: SUS420/SS304 + STL
Float and bracket: SS304
Exhaust valve block: SS304 + Hastelloy
Sealing gasket: Graphite composite gasket

Valve Body Nominal Pressure and Maximum Operating Temperature

Valve body design pressure: PN16
Ductile iron ≤ 232°C

Specifications and Connections

DN20-DN32 BSP screwed
*Custom BSP, BSPT, NPT, and other options available

Mounting Position

Horizontal installation: Right inlet, left outlet
Horizontal installation: Left inlet, right outlet
Vertical installation: Top inlet, bottom outlet

Maximum Steam Trap Operating Pressure Differential

16 bar g

Displacement diagram

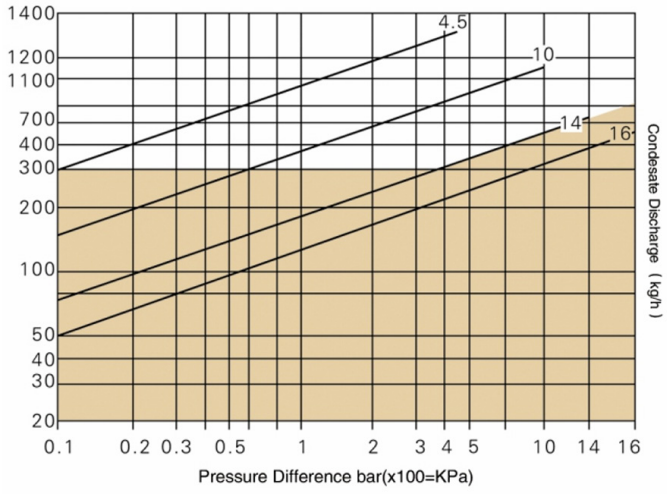

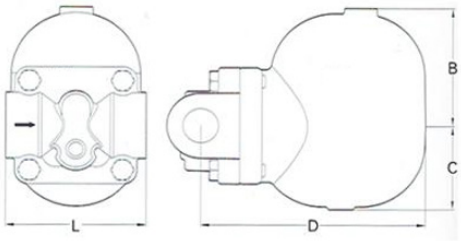

Size	L mm	B mm	C mm	D mm	Weight kg
DN20	120	111	78	195	7.5
DN25	120	111	78	195	7.5
DN32	120	111	78	195	7.5

Design, materials, weights, and performance specifications are approximate and subject to change without notice. Please contact us for the latest information.

Fuchen intelligent Equipment (Hangzhou) Co., Ltd.
Tel:0571-82917716 Fax:0571-82917706
E-mail:fuchen@fuchensteam.com www.fuchensteam.com

FT44-III Flanged



Product Description

1. This valve provides rapid, timely, and continuous discharge of saturated condensate, ensuring no water accumulation within the heating equipment and achieving maximum heating efficiency.
2. The valve core and seat sealing surfaces are made of cobalt-chromium-tungsten alloy, which is wear-resistant, corrosion-resistant, and durable.
3. The seal utilizes a semi-spherical structure, which has been carefully matched and polished for excellent sealing performance.
4. The semi-spherical seal eliminates concentrated wear during operation and provides a long service life.
5. A float-driven lever automatically adjusts the opening of the drain valve seat, ensuring continuous operation and stable performance despite fluctuations in steam pressure.
6. The X-series element automatically drains non-condensable cold and hot gases, eliminating vapor lock and providing excellent non-condensable gas removal performance.
7. The drain valve seat is always below the condensate level, forming a water seal and preventing fresh steam leakage during operation.
8. Continuous condensate discharge with a smooth flow is particularly effective in condensate recovery systems.

Material

Body and bonnet: WCB/CF8
Main valve seat and valve core: SUS420/SS304+STL
Float and bracket: SS304
Exhaust valve assembly: SS304+Hastelloy
Sealing gasket: Graphite composite gasket

Valve Body Nominal Pressure and Maximum Operating Temperature

Valve body design pressure: PN16/PN40
Cast steel/stainless steel ≤350°C

Specifications and Connections

DN15-DN50 flange connection PN16/PN40
*Custom flange standards such as ANSI 150/300/JIS 10K/20K are available.

Mounting Position

Horizontal installation: Right inlet, left outlet
Horizontal installation: Left inlet, right outlet
Vertical installation: Top inlet, bottom outlet

Maximum Steam Trap Operating Pressure Differential

30 bar g

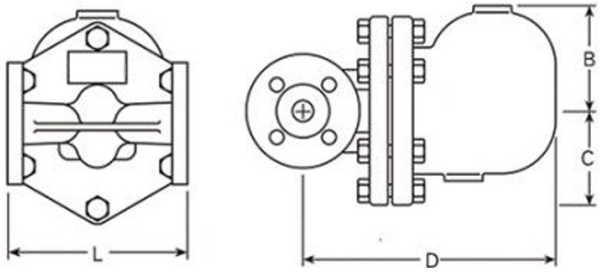

Size	L mm	B mm	C mm	D mm	Weight kg
DN15	160	111	78	245	9.8
DN20	160	111	78	245	9.8
DN25	160	111	78	245	10.6
DN32	230	111	78	245	11.8
DN40	230	111	78	245	12.5
DN50	230	111	78	245	12.8

Displacement diagram

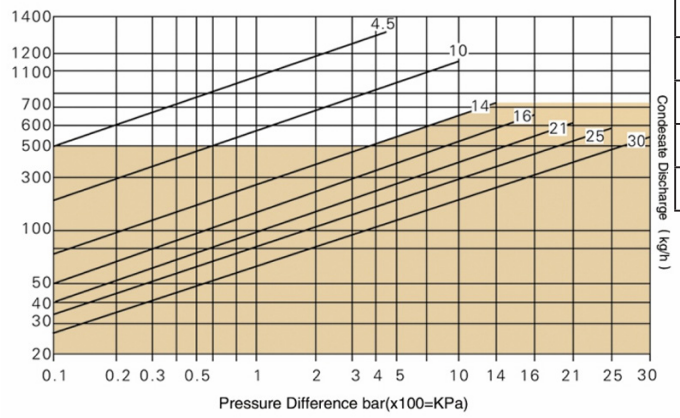

Fuchen intelligent Equipment (Hangzhou) Co., Ltd.
Tel:0571-82917716 Fax:0571-82917706
E-mail:fuchen@fuchensteam.com www.fuchensteam.com

FT43-IV Flanged



Material
Body and bonnet: GGG40
Main valve seat and valve core: SUS420/SS304+STL
Float and bracket: SS304
Exhaust valve assembly: SS304+Hastelloy
Sealing gasket: Graphite composite gasket

Valve Body Nominal Pressure and Maximum Operating Temperature
Valve body design pressure: PN16
Ductile iron ≤ 232°C

Specifications and Connections
DN32-DN50 flange connection, PN16
*Customizable flange standards such as ANSI 150/JIS 10K

Mounting Position
Horizontal installation: Right inlet, left outlet
Horizontal installation: Left inlet, right outlet
Vertical installation: Top inlet, bottom outlet

Maximum Steam Trap Operating Pressure Differential
16 bar g

Product Description
1. This valve provides rapid, timely, and continuous discharge of saturated condensate, ensuring no water accumulation within the heating equipment and achieving maximum heating efficiency.
2. The valve core and seat sealing surfaces are made of cobalt-chromium-tungsten alloy, which is wear-resistant, corrosion-resistant, and durable.
3. The seal utilizes a semi-spherical structure, which has been carefully matched and polished for excellent sealing performance.
4. The semi-spherical seal eliminates concentrated wear during operation and provides a long service life.
5. A float-driven lever automatically adjusts the opening of the drain valve seat, ensuring continuous operation and stable performance despite fluctuations in steam pressure.
6. The X-series element automatically drains non-condensable cold and hot gases, eliminating vapor lock and providing excellent non-condensable gas removal performance.
7. The drain valve seat is always below the condensate level, forming a water seal and preventing fresh steam leakage during operation.
8. Continuous condensate discharge with a smooth flow is particularly effective in condensate recovery systems.

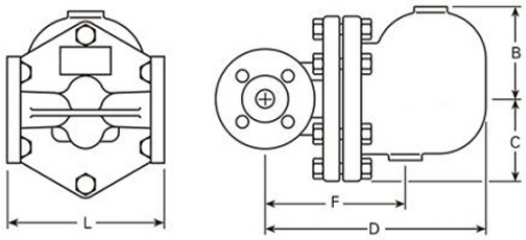

Size	L mm	B mm	C mm	D mm	F mm	Weight kg
DN32	230	140	126	340	225	27.5
DN40	230	140	126	340	225	27.9
DN50	230	140	126	340	225	28.2

Displacement diagram

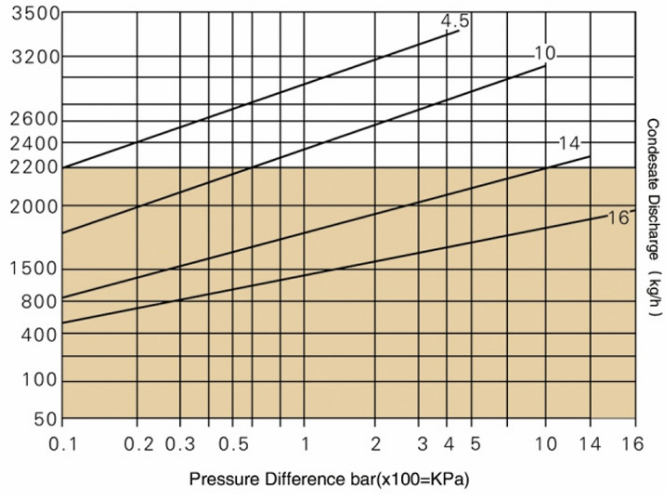

Design, materials, weights, and performance specifications are approximate and subject to change without notice. Please contact us for the latest information.

Fuchen intelligent Equipment (Hangzhou) Co., Ltd.
Tel:0571-82917716 Fax:0571-82917706
E-mail:fuchen@fuchensteam.com www.fuchensteam.com

FT44-IV Flanged



Material
Body and bonnet: WCB/SS304
Main valve seat and valve core: SUS420/SS304+STL
Float and bracket: SS304
Exhaust valve block: SS304+Hastelloy
Sealing gasket: SS304 spiral wound gasket

Valve Body Nominal Pressure and Maximum Operating Temperature
Valve body design pressure: PN16/PN25/PN40
Cast steel/stainless steel ≤350°C

Specifications and Connections
DN32-DN100 flange connection PN16/PN25/PN40
*Custom flange standards such as ANSI 150/300/JIS 10K/20K are available.

Mounting Position
Horizontal installation: Right inlet, left outlet
Horizontal installation: Left inlet, right outlet
Vertical installation: Top inlet, bottom outlet

Maximum Steam Trap Operating Pressure Differential
30 bar g

Product Description
1. This valve provides rapid, timely, and continuous discharge of saturated condensate, ensuring no water accumulation within the heating equipment and achieving maximum heating efficiency.
2. The valve core and seat sealing surfaces are made of cobalt-chromium-tungsten alloy, which is wear-resistant, corrosion-resistant, and durable.
3. The seal utilizes a semi-spherical structure, which has been carefully matched and polished for excellent sealing performance.
4. The semi-spherical seal eliminates concentrated wear during operation and provides a long service life.
5. A float-driven lever automatically adjusts the opening of the drain valve seat, ensuring continuous operation and stable performance despite fluctuations in steam pressure.
6. The X-series element automatically drains non-condensable cold and hot gases, eliminating vapor lock and providing excellent non-condensable gas removal performance.
7. The drain valve seat is always below the condensate level, forming a water seal and preventing fresh steam leakage during operation.
8. Continuous condensate discharge with a smooth flow is particularly effective in condensate recovery systems.

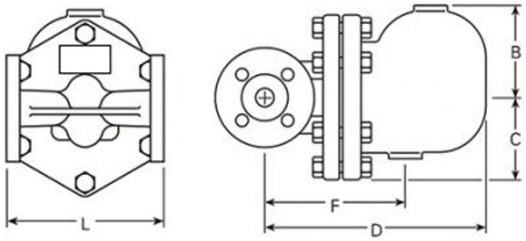

Size	L mm	B mm	C mm	D mm	F mm	Weight kg
DN32	230	140	126	340	225	24
DN40	230	140	126	340	225	25
DN50	230	140	126	340	225	28
DN65	290	140	126	340	225	31
DN80	300	140	126	340	225	33
DN100	320	140	126	340	225	35

Displacement diagram

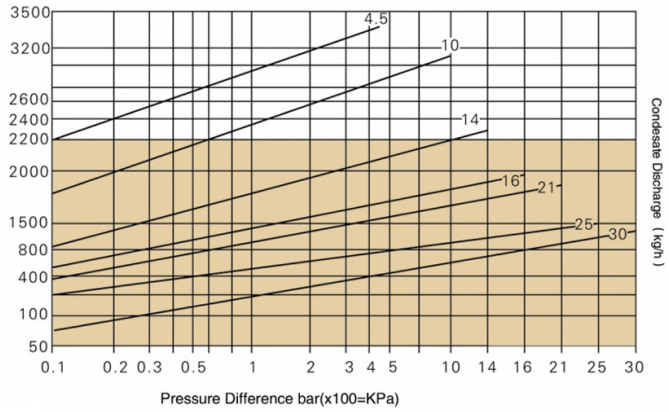

Fuchen intelligent Equipment (Hangzhou) Co., Ltd.
Tel:0571-82917716 Fax:0571-82917706
E-mail:fuchen@fuchensteam.com www.fuchensteam.com

FT43HS-IV Flanged



Material
Body and bonnet: GAGG40
Main valve seat and valve core: SS304 + STL
Float and bracket: SS304/SUS420
Exhaust valve assembly: SS304 + Hastelloy
Sealing gasket: Graphite composite gasket

Valve Body Nominal Pressure and Maximum Operating Temperature
Valve body design pressure: PN16
Ductile iron ≤ 232°C

Specifications and Connections
DN32-DN50 flange connection, PN16
*Customizable flange standards such as ANSI 150/JIS 10K

Mounting Position
Horizontal installation: Right inlet, left outlet
Horizontal installation: Left inlet, right outlet

Maximum Steam Trap Operating Pressure Differential
16 bar g

Product Description
1. This valve provides rapid, timely, and continuous discharge of saturated condensate, ensuring no water accumulation within the heating equipment and achieving maximum heating efficiency.
2. The valve core and seat sealing surfaces are made of cobalt-chromium-tungsten alloy, which is wear-resistant, corrosion-resistant, and durable.
3. The double-hemispherical sealing surface structure is carefully designed and engineered for excellent sealing performance, eliminating concentrated wear during operation and ensuring a long service life.
4. A float-driven lever automatically adjusts the opening of the drain valve seat, ensuring continuous operation and stable performance despite fluctuations in steam pressure.
5. The X-series element automatically discharges non-condensable cold and hot gases, eliminating vapor lock and providing excellent non-condensable gas removal performance.
6. The valve seat is always below the condensate level, forming a water seal and preventing fresh steam leakage during operation.
7. Continuous condensate discharge with smooth water flow is particularly effective in applications requiring large-scale condensate removal and recovery systems.

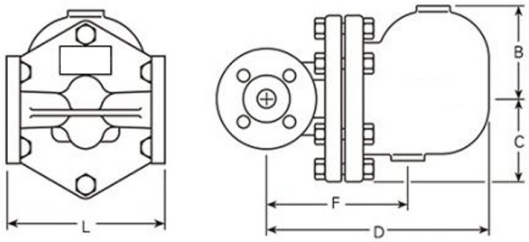

Size	L mm	B mm	C mm	D mm	F mm	Weight kg
DN32	230	140	126	340	225	29
DN40	230	140	126	340	225	29.4
DN50	230	140	126	340	225	30.3

Displacement diagram

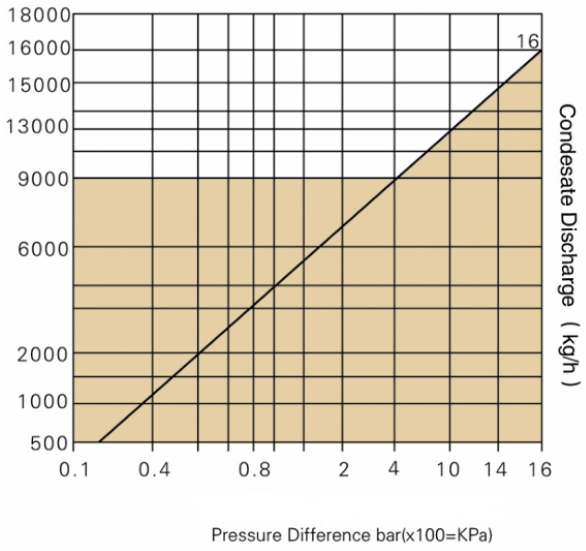

Design, materials, weights, and performance specifications are approximate and subject to change without notice. Please contact us for the latest information.

Fuchen intelligent Equipment (Hangzhou) Co., Ltd.
Tel:0571-82917716 Fax:0571-82917706
E-mail:fuchen@fuchensteam.com www.fuchensteam.com

FT44HS-IV Flanged



Material
Body and bonnet: WCB/SS304
Main valve seat and valve core: SUS420/SS304+STL
Float and bracket: SS304
Exhaust valve block: SS304+Hastelloy
Sealing gasket: SS304 spiral wound gasket

Valve Body Nominal Pressure and Maximum Operating Temperature
Valve body design pressure: PN16/PN25/PN40
Cast steel/stainless steel ≤350°C

Specifications and Connections
DN32-DN100 flange connection PN16/PN25/PN40
*Custom flanges such as ANSI 150/300/JIS 10K/20K are available.

Mounting Position
Horizontal installation: Right inlet, left outlet
Horizontal installation: Left inlet, right outlet

Maximum Steam Trap Operating Pressure Differential
40 bar g

Product Description
1. This valve provides rapid, timely, and continuous discharge of saturated condensate, ensuring no water accumulation within the heating equipment and achieving maximum heating efficiency.
2. The valve core and seat sealing surfaces are made of cobalt-chromium-tungsten alloy, which is wear-resistant, corrosion-resistant, and durable.
3. The double-hemispherical sealing surface structure is carefully designed and engineered for excellent sealing performance, eliminating concentrated wear during operation and ensuring a long service life.
4. A float-driven lever automatically adjusts the opening of the drain valve seat, ensuring continuous operation and stable performance despite fluctuations in steam pressure.
5. The X-series element automatically discharges non-condensable cold and hot gases, eliminating vapor lock and providing excellent non-condensable gas removal performance.
6. The valve seat is always below the condensate level, forming a water seal and preventing fresh steam leakage during operation.
7. Continuous condensate discharge with smooth water flow is particularly effective in applications requiring large-scale condensate removal and recovery systems.

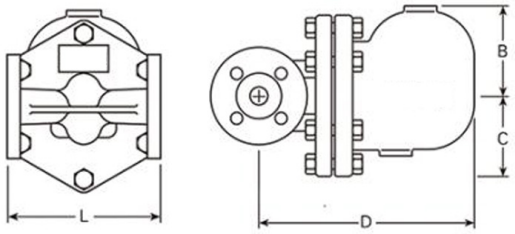

Size	L mm	B mm	C mm	D mm	F mm	Weight kg
DN32	230	140	126	340	225	26
DN40	230	140	126	340	225	27
DN50	230	140	126	340	225	30
DN65	290	140	126	340	225	33
DN80	300	140	126	340	225	35
DN100	320	140	126	340	225	37

Displacement diagram

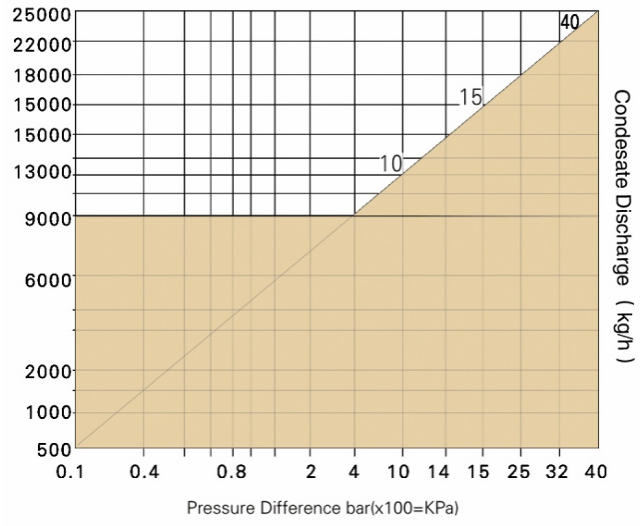

Fuchen intelligent Equipment (Hangzhou) Co., Ltd.
Tel:0571-82917716 Fax:0571-82917706
E-mail:fuchen@fuchensteam.com www.fuchensteam.com

FT44HS-V Flanged



Material
Body and bonnet: WCB/SS304
Main valve seat and valve core: SUS420/SS304+STL
Float and bracket: SS304
Exhaust valve block: SS304+Hastelloy
Sealing gasket: SS304 spiral wound gasket

Valve Body Nominal Pressure and Maximum Operating Temperature
Valve body design pressure: PN16/PN25/PN40
Cast steel/stainless steel ≤350°C

Specifications and Connections
DN50-DN150 flange connection PN16/PN25/PN40
*Custom flanges such as ANSI 150/300/JIS 10K/20K are available.

Mounting Position
Horizontal installation: Right inlet, left outlet
Horizontal installation: Left inlet, right outlet

Maximum Steam Trap Operating Pressure Differential
40 bar g

Product Description
1. This valve provides rapid, timely, and continuous discharge of saturated condensate, ensuring no water accumulation within the heating equipment and achieving maximum heating efficiency.
2. The valve core and seat sealing surfaces are made of cobalt-chromium-tungsten alloy, which is wear-resistant, corrosion-resistant, and durable.
3. The double-hemispherical sealing surface structure is carefully designed and engineered for excellent sealing performance, eliminating concentrated wear during operation and ensuring a long service life.
4. A float-driven lever automatically adjusts the opening of the drain valve seat, ensuring continuous operation and stable performance despite fluctuations in steam pressure.
5. The X-series element automatically discharges non-condensable cold and hot gases, eliminating vapor lock and providing excellent non-condensable gas removal performance.
6. The valve seat is always below the condensate level, forming a water seal and preventing fresh steam leakage during operation.
7. Continuous condensate discharge with smooth water flow is particularly effective in applications requiring large-scale condensate removal and recovery systems.

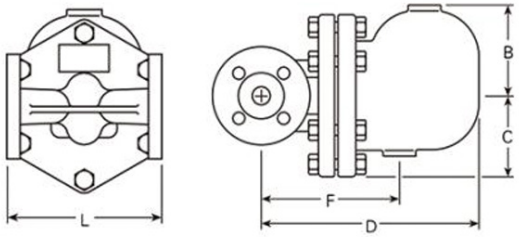

Size	L mm	B mm	C mm	D mm	Weight kg
DN50	380	165	165	400	60
DN65	380	165	165	400	61
DN80	380	165	165	400	62.5
DN100	420	165	165	400	64.5
DN125	420	165	165	400	67
DN150	450	165	165	400	69

Displacement diagram

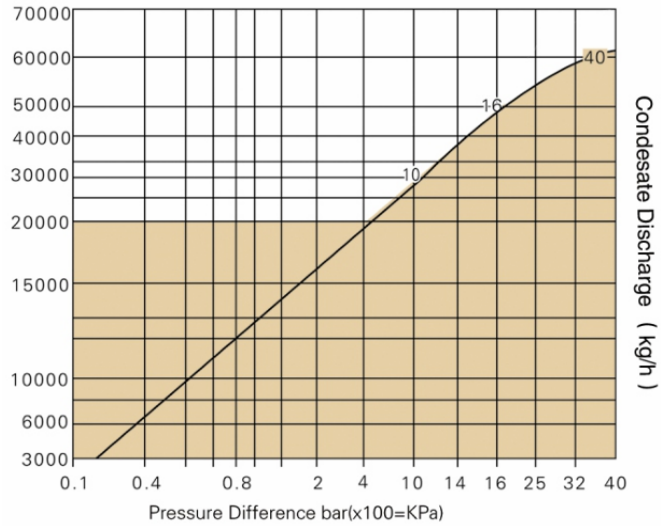

Design, materials, weights, and performance specifications are approximate and subject to change without notice. Please contact us for the latest information.

Fuchen intelligent Equipment (Hangzhou) Co., Ltd.
Tel:0571-82917716 Fax:0571-82917706
E-mail:fuchen@fuchensteam.com www.fuchensteam.com

FT44HSG2-V Flanged



Material
Body and bonnet: WCB/SS304
Main valve seat and valve core: SUS420/SS304+STL
Float and bracket: SS304
Exhaust valve block: SS304+Hastelloy
Sealing gasket: SS304 spiral wound gasket

Valve Body Nominal Pressure and Maximum Operating Temperature
Valve body design pressure: PN16/PN25/PN40
Cast steel/stainless steel ≤350°C

Specifications and Connections
DN80-DN200 flange connection PN16/PN25/PN40
*Customizable with ANSI 150/300/JIS 10K/20K and other flange standards

Mounting Position
Horizontal

Maximum Steam Trap Operating Pressure Differential
40 bar g

Product Description
1. This valve provides rapid, timely, and continuous discharge of saturated condensate, ensuring no water accumulation within the heating equipment and achieving maximum heating efficiency.
2. The valve core and seat sealing surfaces are made of cobalt-chromium-tungsten alloy, which is wear-resistant, corrosion-resistant, and durable.
3. The double-hemispherical sealing surface structure is carefully designed and engineered for excellent sealing performance, eliminating concentrated wear during operation and ensuring a long service life.
4. A float-driven lever automatically adjusts the opening of the drain valve seat, ensuring continuous operation and stable performance despite fluctuations in steam pressure.
5. The X-series element automatically discharges non-condensable cold and hot gases, eliminating vapor lock and providing excellent non-condensable gas removal performance.
6. The valve seat is always below the condensate level, forming a water seal and preventing fresh steam leakage during operation.
7. Continuous condensate discharge with smooth water flow is particularly effective in applications requiring large-scale condensate removal and recovery systems.

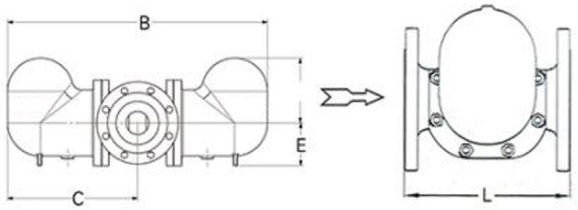

Size	L mm	B mm	C mm	D mm	E mm	Weight kg
DN80	400	910	454	225	148	125
DN100	400	910	454	225	148	130
DN125	450	910	454	225	148	134
DN150	450	910	454	225	148	139
DN200	450	910	454	225	148	139

Displacement diagram

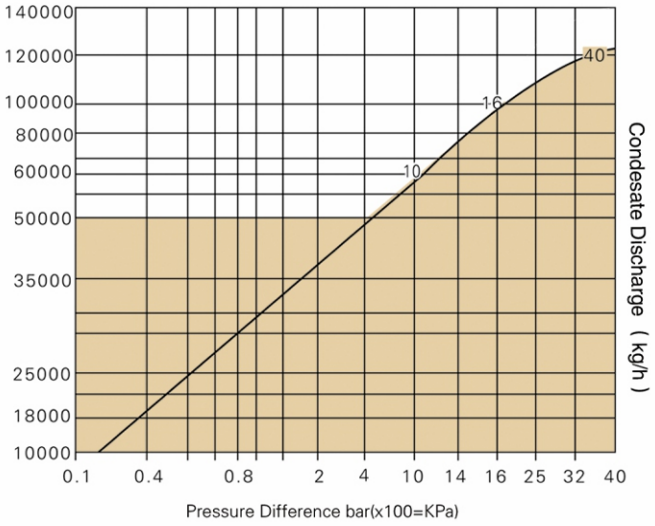

Fuchen intelligent Equipment (Hangzhou) Co., Ltd.
Tel:0571-82917716 Fax:0571-82917706
E-mail:fuchen@fuchensteam.com www.fuchensteam.com

Bimetallic Steam Trap



Design, materials, weights, and performance specifications are approximate and subject to change without notice. Please contact us for the latest information.

Fuchen intelligent Equipment (Hangzhou) Co., Ltd.
Tel:0571-82917716 Fax:0571-82917706
E-mail:fuchen@fuchensteam.com www.fuchensteam.com

TB11 Bimetallic Steam Trap



Product Description

The bimetallic steam trap's thermal element is a bimetallic disc die-casted from two metals with different expansion rates using a special process. When heated, the two layers of metal expand, causing them to bend due to the different expansion rates. This characteristic is exploited to create a thermal element that acts as a switch in the steam trap.

1. The discharge temperature can be adjusted online, allowing for flexible installation positions.
2. It utilizes high-temperature condensate to form a water seal, effectively reducing steam leakage.
3. It offers sensitive operation, resists water hammer, and is silent.
4. It has a simple structure and is easy to maintain.
5. It is suitable for steam mains, steam distributors, steam tracing lines, radiators, low-temperature heating tanks, and jacketed kettles.
6. It is suitable for high-temperature steam lines and distributors.

Installation Precautions

1. Proper installation and maintenance of this valve are the only guarantee of safe and proper operation.
2. Verify that the valve body material, maximum pressure, and maximum temperature meet the operating requirements.
3. Before installation, be sure to clean the piping and remove any debris.
4. The valve should be installed at the lowest point in the pipeline, with the flow direction consistent with the direction marked on the valve body.
5. After ensuring safe system operation, slowly open the valve in front of the steam trap to allow it to gradually warm to normal.
6. Perform regular maintenance to ensure the proper function of the steam trap.

Material

Body and bonnet: WCB/CF8
Main valve seat and valve core: SS304+STL/440C
Spring and filter: SS304
Metal sheet: FeNi18Cr12/FeNi31CoCr6
Sealing gasket: Stainless steel spiral wound gasket

Valve Body Nominal Pressure and Maximum Operating Temperature

Valve body design pressure: PN16/PN25
Cast steel/stainless steel ≤350°C

Specifications and Connections

DN15-DN25 screwed/flanged/butt weld/socket weld
PN16/PN25
*Custom flange standards such as ANSI 150/300/JIS 10K/20K are available

Maximum Steam Trap Operating Pressure Differential

16 bar g

Displacement diagram

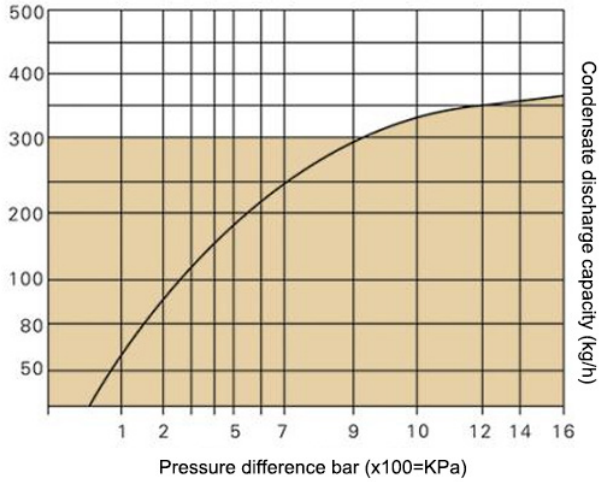

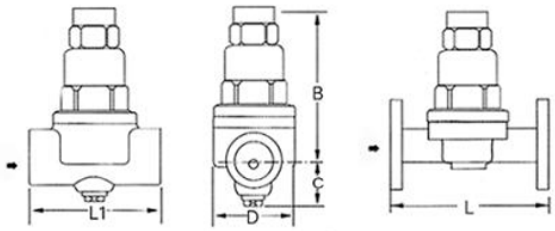

Size	L mm	L1 mm	B mm	C mm	D mm
DN15	150	90	120	18	60
DN20	150	90	120	20	60
DN25	160	95	120	22	60

Fuchen intelligent Equipment (Hangzhou) Co., Ltd.
Tel:0571-82917716 Fax:0571-82917706
E-mail:fuchen@fuchensteam.com www.fuchensteam.com

BK300 Bimetallic Steam Trap



Product Description

The bimetallic steam trap's thermal element consists of two metals with different expansion rates die-cast together using a special process. The two metal layers expand when heated, causing them to bend due to the different expansion rates. This characteristic is exploited to create a thermal element that acts as a switch in the steam trap.

1. Utilizes high-temperature condensate to form a water seal, effectively reducing steam leakage.
2. It operates sensitively, is resistant to corrosion, water hammer, and frost, and is silent during operation.
3. It utilizes an inverted seal, lacking an internal spring structure, eliminating the need to overcome spring resistance, resulting in stable thermal thrust and high sensitivity.
4. Suitable for steam mains, superheated steam mains, steam distributors, steam tracing, pipeline radiators, low-temperature heating tanks, and jacketed kettles.
5. It can discharge condensate below saturation temperature, reducing flash steam losses, and automatically adjusts within its pressure/temperature range.

Installation Precautions

1. Proper installation and maintenance of this valve are the sole guarantee of safe and normal operation.
2. Ensure that the valve body material, pressure, and temperature ratings meet the operating requirements.
3. Clean the pipes and remove any debris before installation.
4. The valve should be installed at the lowest point in the pipe, with the flow direction consistent with the direction marked on the valve body.
5. After ensuring safe system operation, slowly open the valve in front of the steam trap to allow the system to gradually warm to normal.
6. Perform regular maintenance to ensure the proper function of the steam trap.

Material

Body and bonnet: WCB/CF8
Main valve seat and valve core: SS304+STL/440C
Spring and filter: SS304
Metal sheet: FeNi18Cr12/FeNi31CoCr6
Sealing gasket: Stainless steel spiral wound gasket

Valve Body Nominal Pressure and Maximum Operating Temperature

Valve body design pressure: PN40
Cast steel/stainless steel ≤350°C

Specifications and Connections

DN15-DN25 screwed/flanged/butt weld/socket weld
PN16/PN40
*Customizable with ANSI 150/300/JIS 10K/20K and other flange standards

Maximum Steam Trap Operating Pressure Differential

22 bar g

Displacement diagram

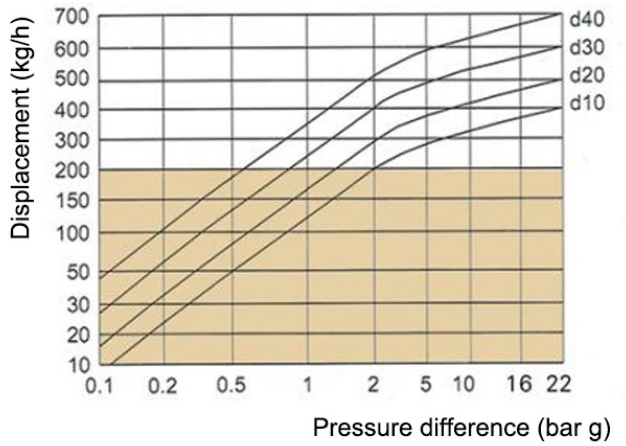

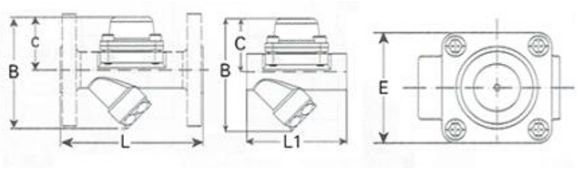

Model	Size	L mm	L1 mm	B mm	C mm	E mm	Weight kg
BK300 BK300F	DN15	150	90	115	60	71	2.0/3.4
	DN20	150	90	115	60	71	2.0/4.1
	DN25	160	95	125	64	71	2.0/4.6

Design, materials, weights, and performance specifications are approximate and subject to change without notice. Please contact us for the latest information.

Fuchen intelligent Equipment (Hangzhou) Co., Ltd.
Tel:0571-82917716 Fax:0571-82917706
E-mail:fuchen@fuchensteam.com www.fuchensteam.com

BK170 Bimetallic Steam Trap



Product Description

The bimetallic steam trap's thermal element consists of two metals with different expansion rates die-cast together using a special process. The two metal layers expand when heated, causing them to bend due to the different expansion rates. This characteristic is exploited to create a thermal element that acts as a switch in the steam trap.

1. Utilizes high-temperature condensate to form a water seal, effectively reducing steam leakage.
2. It operates sensitively, is resistant to corrosion, water hammer, and frost, and is silent during operation.
3. It utilizes an inverted seal, lacking an internal spring structure, eliminating the need to overcome spring resistance, resulting in stable thermal thrust and high sensitivity.
4. Suitable for steam mains, superheated steam mains, steam distributors, steam tracing, pipeline radiators, low-temperature heating tanks, and jacketed kettles.
5. It can discharge condensate below saturation temperature, reducing flash steam losses, and automatically adjusts within its pressure/temperature range.

Installation Precautions

1. Proper installation and maintenance of this valve are the sole guarantee of safe and normal operation.
2. Ensure that the valve body material, pressure, and temperature ratings meet the operating requirements. 3. Clean the pipes and remove any debris before installation.
4. The valve should be installed at the lowest point in the pipe, with the flow direction consistent with the direction marked on the valve body.
5. After ensuring safe system operation, slowly open the valve in front of the steam trap to allow the system to gradually warm to normal.
6. Perform regular maintenance to ensure the proper function of the steam trap.

Material

Body and bonnet: A105/F11/F22/F91, etc.
Main valve seat and valve plug: SS304+STL/440C
Stem: SS304
Strainer and plug: SS304/A193 B8
Metal sheet: FeNi18Cr12/FeNi31CoCr6
Sealing gasket: Stainless steel spiral wound gasket

Valve Body Nominal Pressure and Maximum Operating Temperature

Valve body design pressure: PN40
TMO: ≤600°C

Specifications and Connections

DN15-DN50 screwed/flanged/butt weld/socket weld PN40
*Custom flange standards such as Class 900/1500LB are available

Maximum Steam Trap Operating Pressure Differential

40 bar g

Displacement diagram

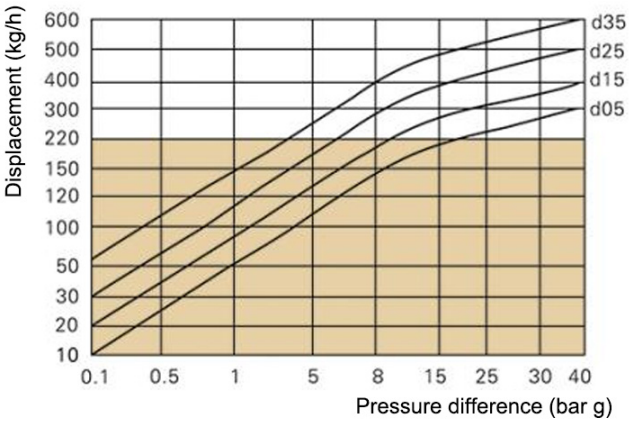

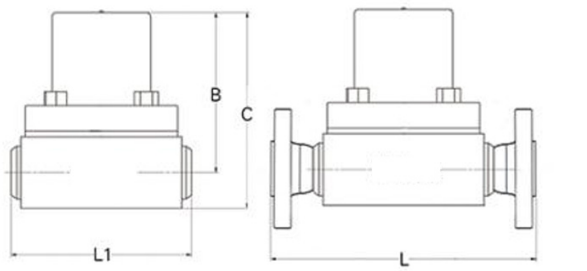

Model	Size	L mm	L1 mm	B mm	C mm
BK130 BK130F	DN15	230	130	115	141
	DN20	230	130	115	141
	DN25	230	130	115	141
	DN32	270	130	115	141
	DN40	270	130	115	141
	DN50	270	130	115	141

Fuchen intelligent Equipment (Hangzhou) Co., Ltd.
Tel:0571-82917716 Fax:0571-82917706
E-mail:fuchen@fuchensteam.com www.fuchensteam.com

BK150 Bimetallic Steam Trap



Product Description

The bimetallic steam trap's thermal element consists of two metals with different expansion rates die-cast together using a special process. The two metal layers expand when heated, causing them to bend due to the different expansion rates. This characteristic is exploited to create a thermal element that acts as a switch in the steam trap.

1. Utilizes high-temperature condensate to form a water seal, effectively reducing steam leakage.
2. It operates sensitively, is resistant to corrosion, water hammer, and frost, and is silent during operation. 3. It utilizes an inverted seal, lacking an internal spring structure, eliminating the need to overcome spring resistance, resulting in stable thermal thrust and high sensitivity.
4. Suitable for steam mains, superheated steam mains, steam distributors, steam tracing, pipeline radiators, low-temperature heating tanks, and jacketed kettles.
5. It can discharge condensate below saturation temperature, reducing flash steam losses, and automatically adjusts within its pressure/temperature range.

Installation Precautions

1. Proper installation and maintenance of this valve are the sole guarantee of safe and normal operation.
2. Ensure that the valve body material, pressure, and temperature ratings meet the operating requirements.
3. Clean the pipes and remove any debris before installation.
4. The valve should be installed at the lowest point in the pipe, with the flow direction consistent with the direction marked on the valve body.
5. After ensuring safe system operation, slowly open the valve in front of the steam trap to allow the system to gradually warm to normal.
6. Perform regular maintenance to ensure the proper function of the steam trap.

Material

Body and bonnet: A105/F11/F22/F91, etc.
Main valve seat and valve plug: SS304+STL/440C
Stem: SS304
Strainer and plug: SS304/A193 B8
Metal sheet: FeNi18Cr12/FeNi31CoCr6
Sealing gasket: Stainless steel spiral wound gasket

Valve Body Nominal Pressure and Maximum Operating Temperature

Valve body design pressure: PN100
TMO: ≤600°C

Specifications and Connections

DN15-DN50 screwed/flanged/butt weld/socket weld PN40
*Custom flange standards such as Class 900/1500LB are available

Maximum Steam Trap Operating Pressure Differential

65 bar g

Displacement diagram

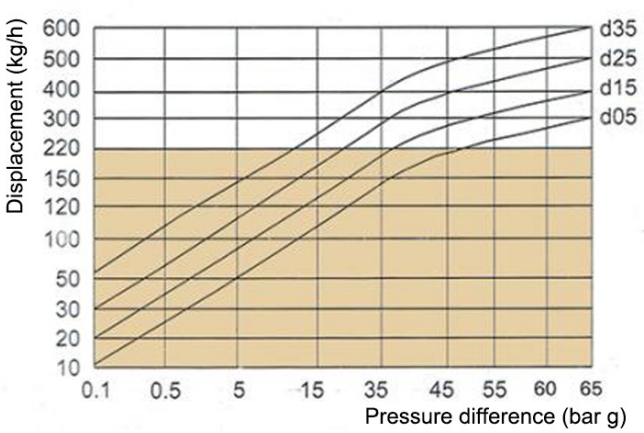

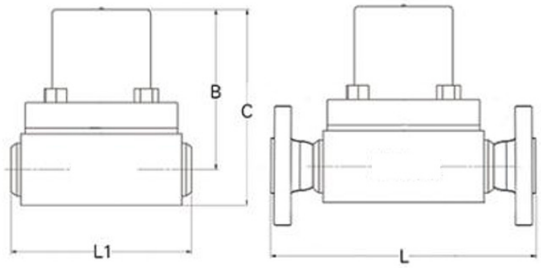

Model	Size	L mm	L1 mm	B mm	C mm
BK150 BK150F	DN15	230	150	115	145
	DN20	230	150	115	145
	DN25	230	150	115	145
	DN32	270	150	115	145
	DN40	270	150	115	145
	DN50	270	150	115	145

Design, materials, weights, and performance specifications are approximate and subject to change without notice. Please contact us for the latest information.

Fuchen intelligent Equipment (Hangzhou) Co., Ltd.
Tel:0571-82917716 Fax:0571-82917706
E-mail:fuchen@fuchensteam.com www.fuchensteam.com

BK170 Bimetallic Steam Trap



Product Description

The bimetallic steam trap's thermal element consists of two metals with different expansion rates die-cast together using a special process. The two metal layers expand when heated, causing them to bend due to the different expansion rates. This characteristic is exploited to create a thermal element that acts as a switch in the steam trap.

1. Utilizes high-temperature condensate to form a water seal, effectively reducing steam leakage.
2. It operates sensitively, is resistant to corrosion, water hammer, and frost, and is silent during operation.
3. It utilizes an inverted seal, lacking an internal spring structure, eliminating the need to overcome spring resistance, resulting in stable thermal thrust and high sensitivity.
4. Suitable for steam mains, superheated steam mains, steam distributors, steam tracing, pipeline radiators, low-temperature heating tanks, and jacketed kettles.
5. It can discharge condensate below saturation temperature, reducing flash steam losses, and automatically adjusts within its pressure/temperature range.

Installation Precautions

1. Proper installation and maintenance of this valve are the sole guarantee of safe and normal operation.
2. Ensure that the valve body material, pressure, and temperature ratings meet the operating requirements.
3. Clean the pipes and remove any debris before installation.
4. The valve should be installed at the lowest point in the pipe, with the flow direction consistent with the direction marked on the valve body.
5. After ensuring safe system operation, slowly open the valve in front of the steam trap to allow the system to gradually warm to normal.
6. Perform regular maintenance to ensure the proper function of the steam trap.

Material

Body and bonnet: A105/F11/F22/F91, etc.
Main valve seat and valve plug: SS304+STL/440C
Stem: SS304
Strainer and plug: SS304/A193 B8
Metal sheet: FeNi18Cr12/FeNi31CoCr6
Sealing gasket: Stainless steel spiral wound gasket

Valve Body Nominal Pressure and Maximum Operating Temperature

Valve body design pressure: PN160
TMO: ≤600°C

Specifications and Connections

DN15-DN50 screwed/flanged/butt weld/socket weld PN40
*Custom flange standards such as Class 900/1500LB are available

Maximum Steam Trap Operating Pressure Differential

120 bar g

Displacement diagram

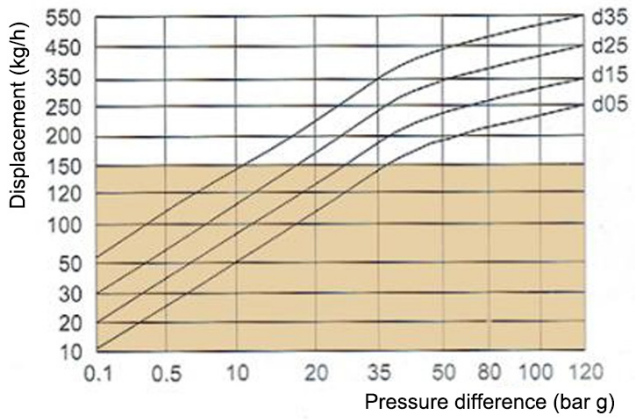

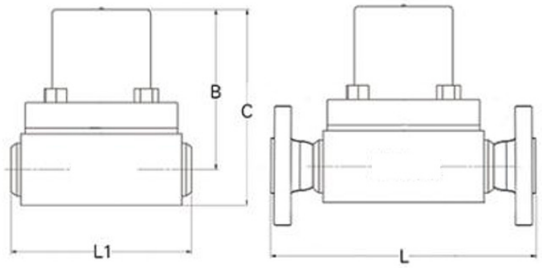

Model	Size	L mm	L1 mm	B mm	C mm
BK170 BK170F	DN15	250	170	146	178
	DN20	250	170	146	178
	DN25	250	170	146	178
	DN32	280	170	146	178
	DN40	280	170	146	178
	DN50	280	170	146	178

Fuchen intelligent Equipment (Hangzhou) Co., Ltd.
Tel:0571-82917716 Fax:0571-82917706
E-mail:fuchen@fuchensteam.com www.fuchensteam.com

Thermodynamic Steam Trap

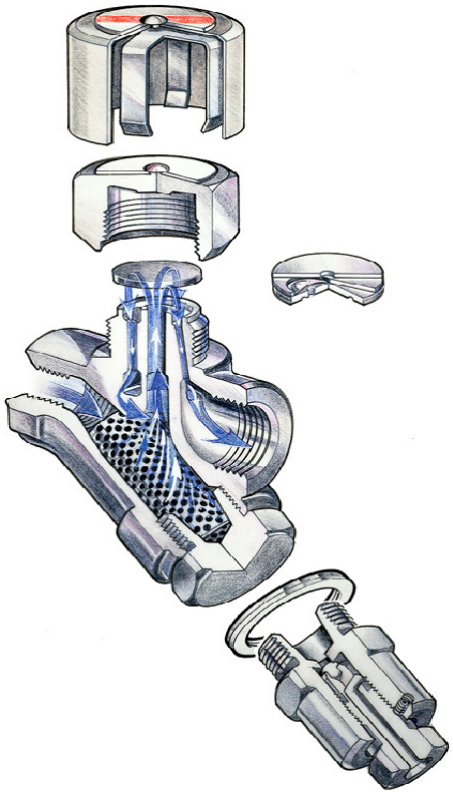

Design, materials, weights, and performance specifications are approximate and subject to change without notice. Please contact us for the latest information.

Fuchen intelligent Equipment (Hangzhou) Co., Ltd.
Tel:0571-82917716 Fax:0571-82917706
E-mail:fuchen@fuchensteam.com www.fuchensteam.com

TD42 Thermodynamic Steam Trap



Product Description

The TD thermodynamic steam trap utilizes the Bernoulli thermodynamic principle, leveraging the dynamic characteristics of condensate flow velocity and volume as it passes through the valve orifice. The pressure differential between the inlet and the pressure chamber drives the disc disc to open and close the valve seat, thereby blocking steam and draining water.

1. Its three equally spaced drain holes ensure a balanced seating of the disc when the valve is closed.
2. The discs are manufactured using a precision lapping process, each matched to the desired design, for superior sealing performance.



Installation Precautions

1. Proper installation and maintenance of this valve are the only guarantee of safe and proper operation.
2. Verify that the valve body material, maximum pressure, and maximum temperature ratings meet the operating requirements.
3. Clean the pipeline and remove any debris before installation.
4. The valve should be installed at the lowest point in the pipeline, with the flow direction aligned with the direction marked on the valve body.
5. After ensuring safe system operation, slowly open the valve upstream of the trap to allow it to gradually warm to normal.
6. Perform regular maintenance to ensure proper operation of the trap.

Applicable Conditions

Steam transmission mains
Small heating equipment

Material

Body and bonnet: CF8/SS304/SS316
Main valve seat and disc: SS304+STL/440C
Plug and strainer: SS304
Strainer gasket: SS316/T2

Valve Body Nominal Pressure and Maximum Operating Temperature

Body design pressure: PN16/PN40
Stainless steel: ≤425°C

Specifications and Connections

DN15-DN50 screwed/flanged/butt weld/socket weld
PN16/PN25
*Customizable with ANSI 150/300/JIS 10K/20K and other flange standards

Maximum Steam Trap Operating Pressure Differential

40 bar g

Displacement diagram

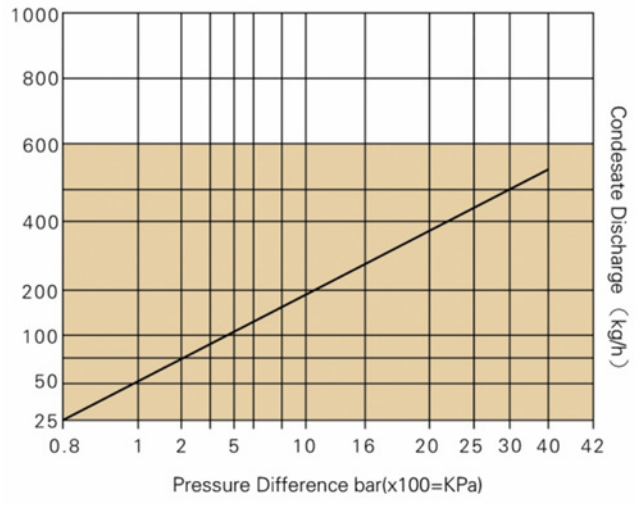

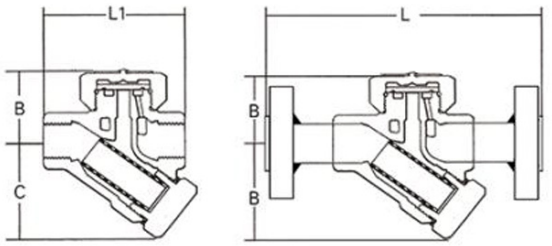

Model	Size	L mm	L1 mm	B mm	C mm	Weight kg
TD42 TD42F	DN15	150	78	41	55	0.75/1.95
	DN20	150	85	41	60	0.95/2.65
	DN25	160	95	41	65	1.5/3.90

Fuchen intelligent Equipment (Hangzhou) Co., Ltd.
Tel:0571-82917716 Fax:0571-82917706
E-mail:fuchen@fuchensteam.com www.fuchensteam.com

TD63 Thermodynamic Steam Trap



Product Description

The TD thermodynamic steam trap is based on the Bernoulli thermodynamic principle. It utilizes the dynamic characteristics of condensate flow velocity and volume as it passes through the valve orifice. The pressure differential between the inlet and the pressure chamber drives the disc disc to open and close the valve seat, thereby blocking steam and draining water.

1. Three equally spaced drain holes ensure a balanced seat when the valve is closed.
2. A built-in bimetallic ring air bleed device ensures fast startup.
3. The disc is manufactured using a precision lapping process, with individual matching and excellent sealing performance.
4. The removable main valve seat design allows for online replacement of internal components, reducing maintenance costs.



Installation Precautions

1. Proper installation and maintenance of this valve are the only guarantee of safe and proper operation.
2. Verify that the valve body material, maximum pressure, and maximum temperature ratings meet the operating requirements.
3. Clean the pipeline and remove any debris before installation.
4. The valve should be installed at the lowest point in the pipeline, with the flow direction aligned with the direction marked on the valve body.
5. After ensuring safe system operation, slowly open the valve in front of the steam trap to allow the system to gradually warm up to normal operating conditions.
6. Perform regular maintenance to ensure the proper function of the steam trap.

Applicable Conditions

Steam transmission main line
Small heating equipment

Material

Valve body and bonnet: A105/SS304
Main valve seat and disc: SUS420/440C
Plug and filter: SS304
Filter gasket: SS316/T2

Valve Body Nominal Pressure and Maximum Operating Temperature

Valve body design pressure: PN100
Stainless steel: ≤425°C

Specifications and Connections

DN15-DN25 screwed/flanged/butt-weld/socket-weld PN100

Maximum Steam Trap Operating Pressure Differential

63 bar g

Displacement diagram

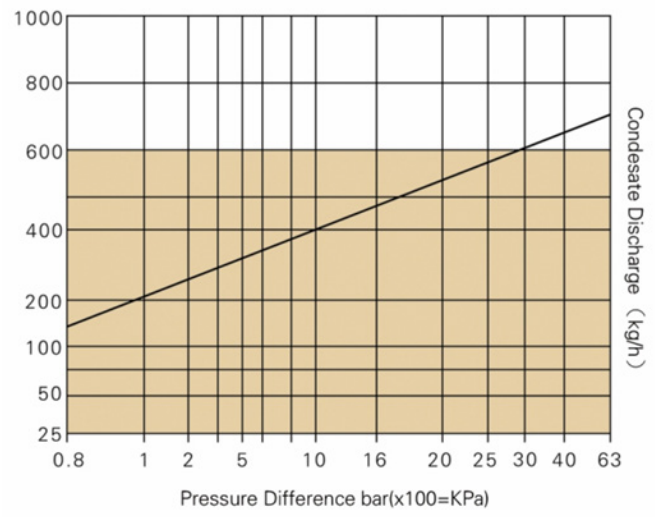

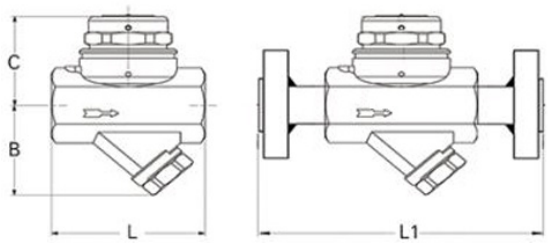

Model	Size	L mm	L1 mm	B mm	C mm	Weight kg
TD63	DN15-20	80	-	62	58	1.2
TD63	DN25	80	-	62	58	1.4
TD63F	DN15-25	-	190	62	63	-

Design, materials, weights, and performance specifications are approximate and subject to change without notice. Please contact us for the latest information.

Fuchen intelligent Equipment (Hangzhou) Co., Ltd.
Tel:0571-82917716 Fax:0571-82917706
E-mail:fuchen@fuchensteam.com www.fuchensteam.com

Condensate Recovery Pump



Fuchen intelligent Equipment (Hangzhou) Co., Ltd.
Tel:0571-82917716 Fax:0571-82917706
E-mail:fuchen@fuchensteam.com www.fuchensteam.com

HCMP14 Condensate Recovery Pump



Product Description

The HCMP14 automatic pump, powered by steam or compressed air, is typically used to lift liquids such as condensate to a higher level. Under appropriate circumstances, it can drain directly from vacuum or pressurized equipment. When used in conjunction with a steam trap, it effectively drains condensate from temperature-controlled heat exchangers under all operating conditions, even vacuum.

1. Unique linkage design ensures trouble-free operation and durability.
2. Can be installed directly after steam-using equipment for condensate recovery without a trap.
3. No cavitation.
4. Non-electrically powered, using steam or compressed air as the motive force, it can be used in hazardous and explosion-proof environments.

Material

Body and bonnet: WCB/SS304
Inlet and exhaust valve assemblies: SUS420/440C
Float and connecting rod assembly: SS304
Spring: Inconel
Sealing gasket: Graphite composite

Valve Body Nominal Pressure and Maximum Operating Temperature

Valve body design pressure: PN16
Cast steel/stainless steel: ≤350°C

Specifications and Connections

DN50-DN100 flange connection, PN16
*Custom flanges to ANSI 150/300/JIS 10K/20K and other standards are available

Selection is based on: power medium pressure, system back pressure, water inlet height and required displacement to select a condensate recovery pump of appropriate diameter.

Selection Table

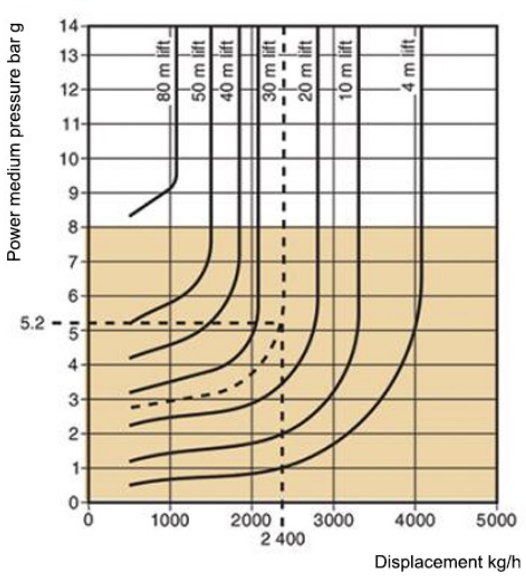

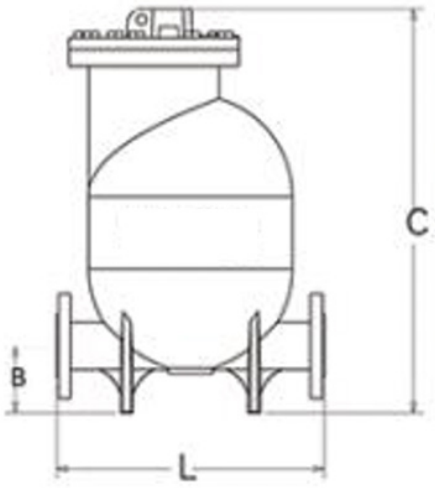

Size	L mm	B mm	C mm	Weight kg
DN50*DN50	420	105	638	82
DN80*DN50	420	105	638	85
DN100*DN80	470	105	638	90

Design, materials, weights, and performance specifications are approximate and subject to change without notice. Please contact us for the latest information.

Fuchen intelligent Equipment (Hangzhou) Co., Ltd.
Tel:0571-82917716 Fax:0571-82917706
E-mail:fuchen@fuchensteam.com www.fuchensteam.com

Mechanical Condensate Recovery Single Pump Unit



Product Description

The combination pump incorporates an automatic pump, water storage tank, and other necessary accessories within a rigid housing. To ensure proper operation of the front-end steam trap, the combination pump is designed to operate in an open configuration, and the water storage tank is not pressurized.

1. The open combination pump design ensures that the front-end steam trap does not experience drainage problems under any operating conditions.
2. It requires no electrical power and uses steam or compressed air as the motive force to transport condensate to a recovery point.
3. No flash steam is wasted.
4. It is non-electrically driven and can be used in hazardous and explosion-proof environments.

Material

Base, Water Tank: WCB/SS304
Valve Body, Bonnet: WCB/SS304
Main Valve Seat, Valve Core: SUS420/SS304+STL
Float, Bracket: SS304
Exhaust Valve Assembly: SS304+Hastelloy

Valve Body Nominal Pressure and Maximum Operating Temperature

Valve Body Design Pressure: PN16
Cast Steel/Stainless Steel: ≤350°C

Specifications and Connections

DN50-DN100 Flange Connection, PN16
*Customizable with ANSI 150/300/JIS 10K/20K and other flange standards

Single Pump Combined Flow Rate

5T/H

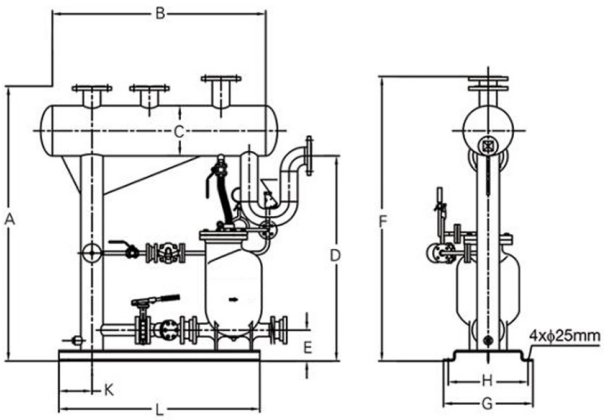

L mm	A mm	B mm	C mm	D mm
1030	1413	1030	250	1155
E mm	F mm	G mm	H mm	K mm
160	1460	460	410	170

Design, materials, weights, and performance specifications are approximate and subject to change without notice. Please contact us for the latest information.

Fuchen intelligent Equipment (Hangzhou) Co., Ltd.
Tel:0571-82917716 Fax:0571-82917706
E-mail:fuchen@fuchensteam.com www.fuchensteam.com

Mechanical Condensate Recovery Single Pump Unit



Valve Body Nominal Pressure and Maximum Operating Temperature

Valve body design pressure: PN16
Cast steel/stainless steel: ≤350°C

Specifications and Connections

DN50-DN100 flange connection, PN16
*Custom flange standards such as ANSI 150/300/JIS 10K/20K are available

Product Description

The combination pump incorporates an automatic pump, water storage tank, and other necessary accessories within a rigid housing. To ensure proper operation of the front-end steam trap, the combination pump is designed to operate in an open configuration, and the water storage tank is not pressurized.

1. The open combination pump design ensures that the front-end steam trap does not experience drainage problems under any operating conditions.
2. It requires no electrical power and uses steam or compressed air as the motive force to transport condensate to a recovery point.
3. No flash steam is wasted.
4. It is non-electrically driven and can be used in hazardous and explosion-proof environments.

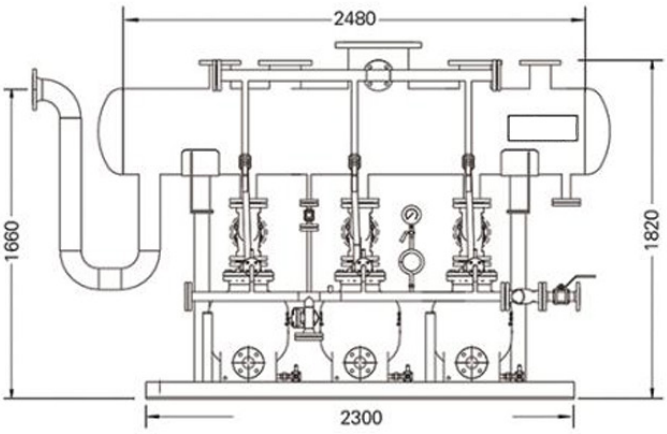

Material

Body and bonnet: WCB/SS304
Inlet and exhaust valve assemblies: SUS420/440C
Float and connecting rod assembly: SS304
Spring: ASTM B367
Sealing gasket: Graphite composite gasket

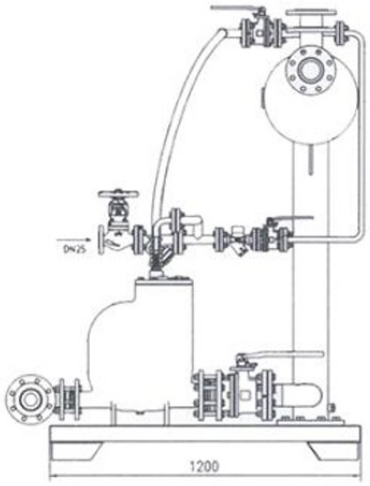

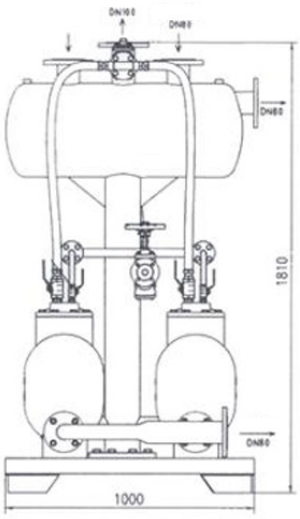

Design, materials, weights, and performance specifications are approximate and subject to change without notice. Please contact us for the latest information.

Fuchen intelligent Equipment (Hangzhou) Co., Ltd.
Tel:0571-82917716 Fax:0571-82917706
E-mail:fuchen@fuchensteam.com www.fuchensteam.com

Pressure Reducing Valve



Fuchen intelligent Equipment (Hangzhou) Co., Ltd.
Tel:0571-82917716 Fax:0571-82917706
E-mail:fuchen@fuchensteam.com www.fuchensteam.com

PRV-25P Pilot Valve Type Pressure Reducing Valve



Product Description

The 25P is a self-acting, pilot-operated pressure reducing valve. It senses downstream pressure via an external pressure sensing tube, adjusts the main valve opening, and maintains a stable pressure. When there is no downstream load, the valve closes, stabilizing the downstream pressure at the adjusted value. This pilot-operated pressure reducing valve features a single-seat main valve with a carbide-finished valve core and employs both flat and conical sealing. It meets ANSI Class 4 leakage standards.

This valve utilizes a large diaphragm and an external sensing mechanism to achieve stable secondary pressure control, providing excellent control performance despite primary pressure fluctuations and secondary load variations.

This precise and reliable product reduces steam pressure from high pressure to the effective operating range of equipment while preventing damage.

Installation Precautions

1. A steam separator should be installed upstream of the pressure reducing valve, and a steam trap should be installed at the bottom of the steam separator.
2. A filter should be installed upstream with a 100-mesh filter.
3. Bellows stop valves should be installed before and after the pressure reducing valve. Select full-bore stop valves to ensure rated flow and good control.
4. Pressure gauges should be installed before and after the pressure reducing valve. 5. Install a bypass in the pressure reducing valve piping to allow maintenance without shutting down the equipment.

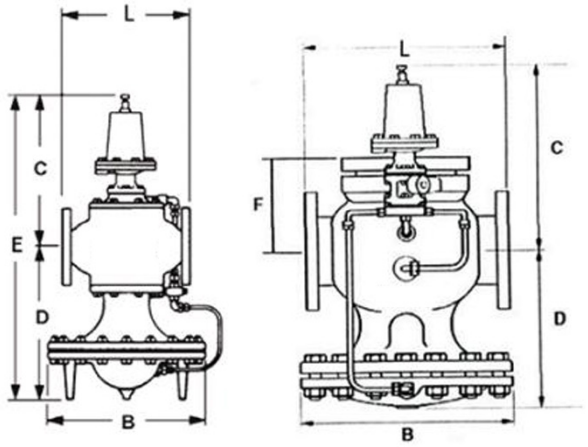

6. The safety valve should trip at a lower safe working pressure than the downstream equipment. Consider the maximum flow rate of the pressure reducing valve when selecting the model, as its reseating characteristics and the valve itself should be considered in the event of a pressure reducing valve failure.
7. When setting the pressure under no-load conditions, maintain a minimum distance of 3 meters from the pressure reducing valve. Otherwise, rapid pressure fluctuations may cause the pressure reducing valve to fail to reduce pressure properly for a short period of time, significantly shortening its service life.

Material

Valve body, bonnet, and upper and lower discs: GGG40
Main valve seat, valve core, and pilot assembly: SUS420/440C
Ejector stem and main valve spring: SS304/SS302
Diaphragm: QSN alloy copper/SS316L
Sealing gasket: Graphite composite gasket/non-asbestos gasket

Valve Body Nominal Pressure and Maximum Operating Temperature

Valve body design pressure: PN16
Ductile iron: ≤232°C

Specifications and Connections

DN15-DN150 flange connection PN16/PN25
DN15-DN150 flange connection ANSI 150

Pressure Reduction Ratio and Pressure Control Range

Pressure reduction ratio: 10:1
Three different spring colors are available to control downstream pressure:
Yellow: 0.2 bar g - 2.1 bar g
Blue: 1.4 bar g - 7.0 bar g
Red: 5.6 bar g - 14.0 bar g

	L mm	B mm	C mm	D mm	E mm	F mm	Weight (flanged) kg
DN15	160	193	309	157	466	-	13
DN20	160	193	309	157	466	-	14
DN25	166	219	308	171	479	-	20
DN32	205	219	322	179	501	-	25
DN40	216	219	322	179	501	-	26
DN50	240	269	338	208	546	-	37
DN65	284	346	297	354	651	-	74
DN80	308	346	294	367	661	-	87
DN100	353	397	325	410	735	-	113
DN125	400	397	325	410	735	-	135
DN150	490	502	297	435	-	228	278

Design, materials, weights, and performance specifications are approximate and subject to change without notice. Please contact us for the latest information.

Fuchen intelligent Equipment (Hangzhou) Co., Ltd.
Tel:0571-82917716 Fax:0571-82917706
E-mail:fuchen@fuchensteam.com www.fuchensteam.com

PRV-25P Pressure Reducing Valve Flow Table

(kg/h)

P1 (MPA)	P2 (MPA)	DN15	DN20	DN25	DN32	DN40	DN50	DN65	DN80	DN100	DN125	DN150
1.6	0.1–0.7	1020	1468	2223	2917	3835	6528	11016	14280	22032	22848	45900
	1	893	1286	1947	2554	3358	5716	9658	12520	19317	30033	40245
	1.3	580	1121	1810	2414	3448	6034	9655	12759	19827	21017	26896
1.4	0.1–0.6	900	1296	1962	2574	2284	5760	9720	12600	19440	20160	40500
	1	702	1011	1531	2009	2642	4498	7599	9851	15199	15762	31664
	1.1	510	952	1539	2052	2931	5129	8207	10845	16853	17864	22861
1.2	0.1–0.5	780	1123	1700	2230	2932	4992	8424	10920	16848	17472	35100
	1	465	868	1403	1871	2672	4677	7483	9688	15366	16288	20844
1	0.1–0.4	660	950	1438	1887	2481	4224	7128	9240	14256	14784	29700
	0.5	635	914	1385	1817	2388	4066	6870	8906	13740	14249	28626
	0.8	375	700	1131	1509	2155	3771	6034	7974	12392	13136	16810
0.9	0.1–0.4	600	884	1308	1716	2256	3840	6480	8400	13960	13440	27000
	0.5	551	793	1201	1576	2072	3528	5961	7728	11923	12364	24840
	0.7	336	527	1014	1352	1931	3379	5407	7145	11103	11768	15061
0.8	0.1–0.3	540	777	1177	1544	2030	3456	5832	7560	11664	12096	24300
	0.5	300	560	805	1207	1724	3017	4827	6379	9914	10508	13448
0.7	0.1–0.3	480	691	1046	1372	1804	3072	5184	6720	10368	10752	21600
	0.5	270	504	814	1086	1552	2715	4345	5741	8922	9457	12103
0.6	0.1–0.2	420	604	915	1201	1579	2688	4536	5880	9072	9408	18900
	0.3	395	570	862	1132	1488	2533	4280	5549	8560	8878	17830
	0.5	240	438	724	965	1379	2414	3852	5103	7931	8407	10758
0.5	0.1–0.2	360	518	784	1029	1353	2304	3888	5040	7776	8064	16200
	0.3	308	443	671	881	1158	1972	3332	4320	6665	6912	13885
	0.4	201	375	606	809	1155	2021	3234	4274	6642	7041	9010
0.4	0.05–0.15	300	432	654	858	1128	1920	3240	4200	6480	6720	13500
	0.3	165	308	498	664	948	1659	2656	3509	5452	5779	7396
0.3	0.05–0.1	240	345	523	686	902	1536	2592	3360	5184	5376	10800
	0.2	135	252	407	543	776	1358	2172	2871	4461	4729	6051
0.2	0.05	154	221	335	440	579	986	1666	2160	3332	3456	6942
	0.1	90	187	271	362	517	905	1448	1914	2974	3152	4034
0.1	0.05	60	112	181	241	345	503	965	1276	1962	2101	2689

Steam pressure reducing valve installation diagram

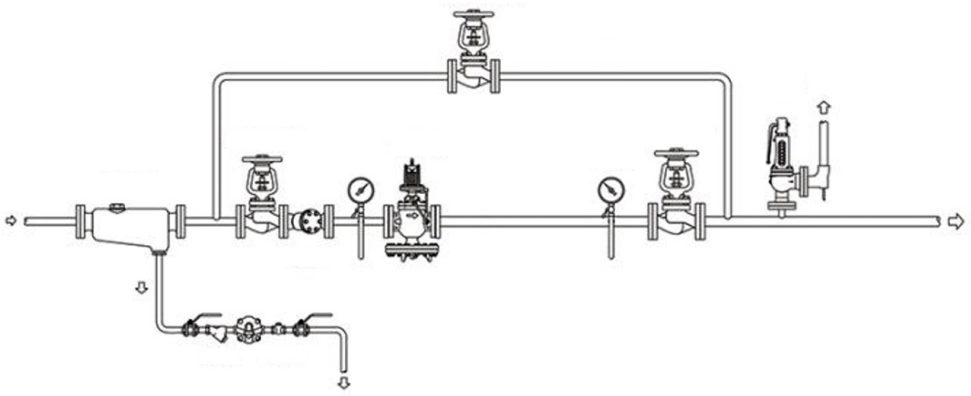

Fuchen intelligent Equipment (Hangzhou) Co., Ltd.
Tel:0571-82917716 Fax:0571-82917706
E-mail:fuchen@fuchensteam.com www.fuchensteam.com

PRV1000 Pilot Piston Steam Pressure Reducing Valve



Product Description

The GP1000 series steam pressure reducing valve is a piston-type, pilot-actuated pressure reducing valve. It can be used in high-frequency applications ranging from low to high flow rates, featuring a simple and robust internal structure.

1. Compared to previous pressure reducing valves, it offers significantly improved performance and durability.
2. The main valve features a spherical surface, ensuring high sealing and minimal leakage, meeting ANSI Class 4 standards.
3. The gasket is made of non-asbestos material.

Installation Precautions

1. A steam-water separator should be installed at the front of the pressure reducing valve, and a steam trap should be installed at the bottom of the separator.
2. A filter with a 100-mesh screen should be installed at the front of the pressure reducing valve.
3. Bellows stop valves should be installed before and after the pressure reducing valve. Select full-bore stop valves to ensure rated flow and good control.
4. Pressure gauges should be installed before and after the pressure reducing valve.
5. A bypass should be installed in the pressure reducing valve piping to allow maintenance without shutting down the equipment. 6. The safety valve trips at a lower safe working pressure than the downstream equipment. When selecting a pressure reducing valve, consider the maximum flow rate. This is because the valve's reseating characteristics and the valve's performance should be considered in the event of a failure.

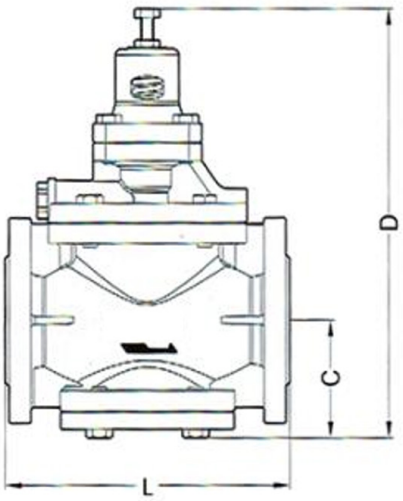

Material

Body and bonnet: GGG40
Main valve seat, valve core, and pilot assembly: SUS420/ SS304+STL
Ejector stem and main valve spring: SS304/SS302
Piston and sealing ring: CAC406/PTFE
Diaphragm: SS301
Sealing gasket: Graphite composite gasket/non-asbestos gasket

Valve Body Nominal Pressure and Maximum Operating Temperature

Body design pressure: PN16
Ductile iron: ≤232°C

Specifications and Connections

DN15-DN100 flange connection PN16
DN15-DN100 flange connection JIS 10K

Pressure Reduction Ratio and Pressure Control Range

Pressure reduction ratio: 10:1
0.1 bar - 10 bar

	National L mm	Japanese L mm	C mm	D mm	National weight kg	Japanese weight kg
DN15	150	150	64	285	8.0	8.0
DN20	150	155	64	285	8.5	8.5
DN25	160	160	67	300	10.0	10.0
DN32	180	190	82	323	14.0	14.0
DN40	200	190	82	323	14.5	15.5
DN50	230	220	93	347	20.0	21.0
DN65	290	245	100	357	30.0	30.0
DN80	310	290	122	404	35.0	37.0
DN100	350	330	144	450	52.5	57.0

Design, materials, weights, and performance specifications are approximate and subject to change without notice. Please contact us for the latest information.

Fuchen intelligent Equipment (Hangzhou) Co., Ltd.
Tel:0571-82917716 Fax:0571-82917706
E-mail:fuchen@fuchensteam.com www.fuchensteam.com

PRV1000 Pressure Reducing Valve Flow Table

(kg/h)

P1(MPa)	P2(MPa)	DN15	DN20	DN25	DN32	DN40	DN50	DN65	DN80	DN100
1	0.05*	92	212	369	600	831	1,478	2,310	3,326	5.913
	0.1–0.4	132	303	528	858	1,188	2,112	3,300	4,752	8.448
	0/5	127	292	508	825	1,143	2,033	3,176	4,574	8.132
	0.6	116	268	467	760	1,052	1,871	2,923	4,210	7.484
	0.7	104	239	416	676	936	1,664	2,601	3,745	6.659
	0.8	87	200	348	566	784	1,394	2,179	3,137	5.578
	0.9	63	145	252	410	568	1,010	1,578	2,273	4.042
0.9	0.1–0.4	120	276	480	780	1,080	1,920	3,000	4,320	7.680
	0.5	110	256	441	716	992	10764	2.756	3.969	7.056
	0.6	98	226	393	639	884	1.574	2.456	3.543	6.299
	0.7	82	190	330	537	744	1.323	2.067	2.976	5.292
	0.8	60	138	240	390	540	961	1.501	20162	3.844
0.8	0.1–0.3	108	248	432	702	972	1.728	2.700	3.888	6.912
	0.4	103	237	412	670	928	1.650	2.578	3.712	6.6.00
	0.5	92	212	369	600	832	1.479	2.311	3.328	5.916
	0.6	77	179	311	506	701	1.247	1.949	20806	4.989
	0.7	56	130	227	369	511	909	1.420	2.045	3.636
0.7	0.1–0.3	96	220	384	624	864	1.536	2.400	3.456	6.144
	0.4	86	197	344	559	774	1.377	2.151	3.098	5.508
	0.5	72	167	291	474	656	1.166	1.823	2.625	4.667
	0.6	53	122	213	346	480	854	1.334	1.921	3.416
0.6	0.1–0.2	84	193	336	546	756	1.344	2.100	3.024	5.376
	0.3	79	182	316	514	712	1266	1.979	2.850	5.067
	0.4	67	155	270	438	607	1.080	1.687	2.430	4.321
	0.5	49	114	198	322	447	795	1.242	1.788	3.180
0.5	0.1–0.2	72	165	288	468	648	1.152	1.800	2.592	4.608
	0.3	61	141	246	400	554	986	1.540	2.218	3.944
	0.4	45	105	182	297	411	731	1.142	1.645	2.925
0.4	0.1	60	138	240	390	540	960	1.500	2.160	3.840
	0.2	55	126	220	358	496	882	1..378	1.984	3.528
	0.3	41	95	165	268	372	661	1.033	1.488	2.646
0.3	0.1	48	110	192	312	432	768	1.200	1.728	3.072
	0.2	36	–3	145	237	328	583	911	1.312	2.333
0.2	0.1	30	70	123	200	277	493	770	1.1.9	1.972
0.1	0.05	18	41	72	118	164	291	455	656	1.166

Fuchen intelligent Equipment (Hangzhou) Co., Ltd.
Tel:0571-82917716 Fax:0571-82917706
E-mail:fuchen@fuchensteam.com www.fuchensteam.com

YP-R1 Direct Acting Steam Pressure Reducing Valve



Product Description

Widely used for steam pressure reduction and stabilization in small steam-using equipment such as cleaning machines, sterilizers, food processing machines, and medical devices.

1. Compact design for easy installation.
2. Simple structure, excellent durability, and easy maintenance.
3. The valve body and internal components are made entirely of stainless steel for high corrosion resistance.
4. External pressure bellows sensing for excellent performance.

Specification

Model	YP-R1	YP-C1
Connection	Rc internal thread	Chuck
Nominal diameter DN	15、20、25	3/4"、1"
Nominal pressure (MPa)	1.6	1.0
Working pressure (MPa)	0.2~1.6	0.2~1.0
Pressure reduction range (MPa)	A:0.02~0.1 B:0.05~0.4 C:0.4~1.0	A:0.02~0.1 B:0.05~0.4 C:0.4~0.8
Maximum operating temperature (°C)	200	180

Material

No.	Name	Material	No.	Name	Material
1	Body	SS	10	Adjusting screw	SS
2	Seat	SS	11	Spring seat	SS
3	Disc	SS	12	Upper cover	SS
4	Screen	SS	13	Spring	SS
5	Lower cover	SS	14	Stem	SS
6	Disc spring	SS	15	Adjustment handle	Plastic
7	Gasket	PTFE	16	Screws	SS
8	Gasket	PTFE	17	Nameplate	SS
9	Bellows	SS			

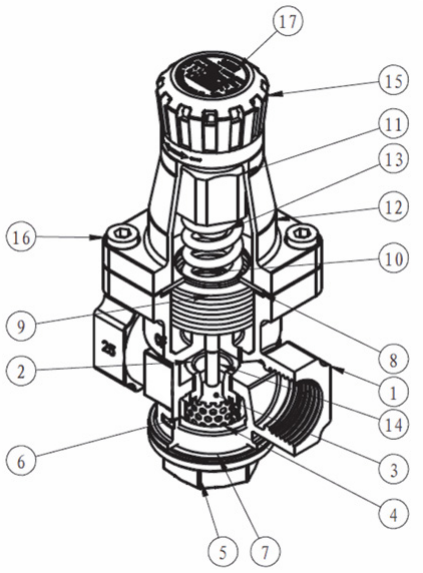

Design, materials, weights, and performance specifications are approximate and subject to change without notice. Please contact us for the latest information.

Fuchen intelligent Equipment (Hangzhou) Co., Ltd.
Tel:0571-82917716 Fax:0571-82917706
E-mail:fuchen@fuchensteam.com www.fuchensteam.com

Size

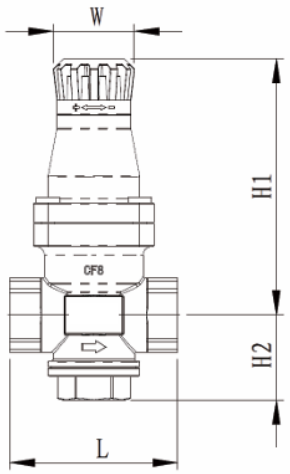

YP-R1

Nominal diameter（DN）	Size（mm）				Weight（kg）
	H1	H2	W	L	
15	146	48	46	80	2.0
20	146	48	46	85	2.0
25	146	48	46	95	2.1

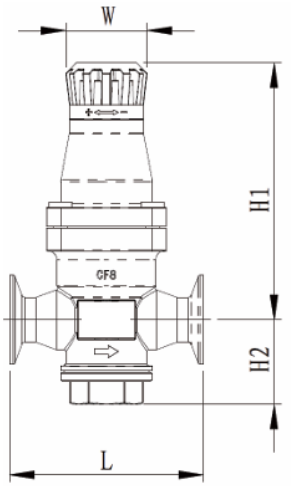

YP-C1

Nominal diameter（DN）	Size（mm）				Weight（kg）
	H1	H2	W	L	
3/4"	146	48	46	110	2.1
1"	146	48	46	110	2.1

Displacement diagram

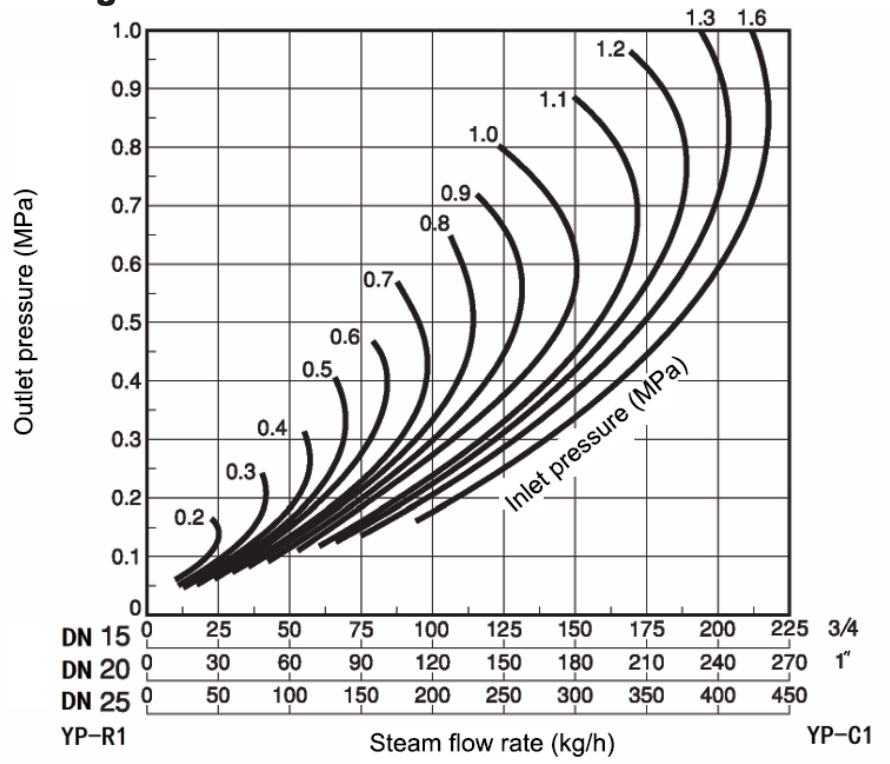

Fuchen intelligent Equipment (Hangzhou) Co., Ltd.
Tel:0571-82917716 Fax:0571-82917706
E-mail:fuchen@fuchensteam.com www.fuchensteam.com

Control Valve



Design, materials, weights, and performance specifications are approximate and subject to change without notice. Please contact us for the latest information.

Fuchen intelligent Equipment (Hangzhou) Co., Ltd.
Tel:0571-82917716 Fax:0571-82917706
E-mail:fuchen@fuchensteam.com www.fuchensteam.com

Pneumatic Diaphragm Control Valve RVA-1/RVA-2



Product Description

The RVA-1 and RVA-2 pneumatic diaphragm control valves are suitable for various process applications, enabling precise fluid control and regulation.

1. New actuator with a multi-spring, deep-grooved diaphragm structure offers a compact design.
2. Dual-guided single seat with cage for flexible operation and easy maintenance.
3. Air-to-open and air-to-close selectable options.
4. Available valve seats with different Cv values for each valve.
5. Integrated modular design for easy installation and maintenance.
6. Equipped with a positioner and optional feedback for high control accuracy.

Specification

Model	RVA-1 (without feedback) RVA-2 (with feedback)	RVA-1S (without feedback) RVA-2S (with feedback)
Valve body material	WCB	CF8
Applicable fluid	Steam	
Connection	Flanged	
Nominal pressure	PN16,PN40	
Nominal diameter (mm)	DN15 ～ 200	
Air source pressure (MPa)	0.14 ～ 1.0	
Actuator	Thin film	
Performance indicators	Basic error ±1%, hysteresis 1%, dead zone 0.4%	
Rated leakage of valve seat	Metal valve seat: Grade IV / Soft valve seat: Grade VI	
Flow characteristics	Equal percentage	
Adjustment range	50：1	
Action type	Air-to-open (default)	

Material

No.	Name	RVA-1、RVA-2	RVA-1S、RVA-2S
1	Body	WCB	CF8
2	Disc	SS+STL	SS+STL
3	Seat	SS+STL	SS+STL
4	Cage	SS	SS
5	Sealing gasket	SS	SS
6	Cover	CS	CS
7	Filler	PTFE/ Flexible graphite	PTFE/ Flexible graphite

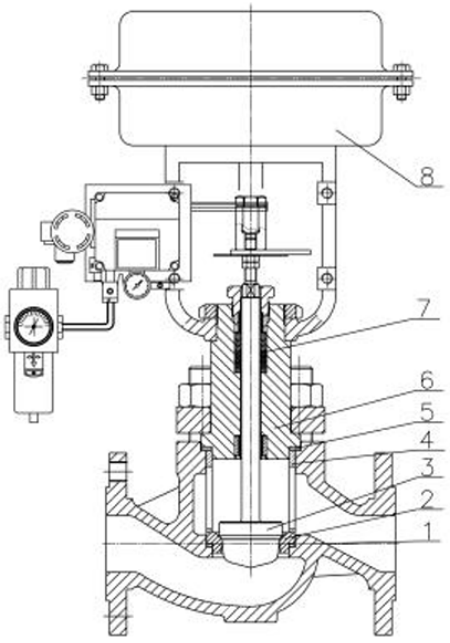

Fuchen intelligent Equipment (Hangzhou) Co., Ltd.

Tel:0571-82917716 Fax:0571-82917706

E-mail:fuchen@fuchensteam.com www.fuchensteam.com

Size

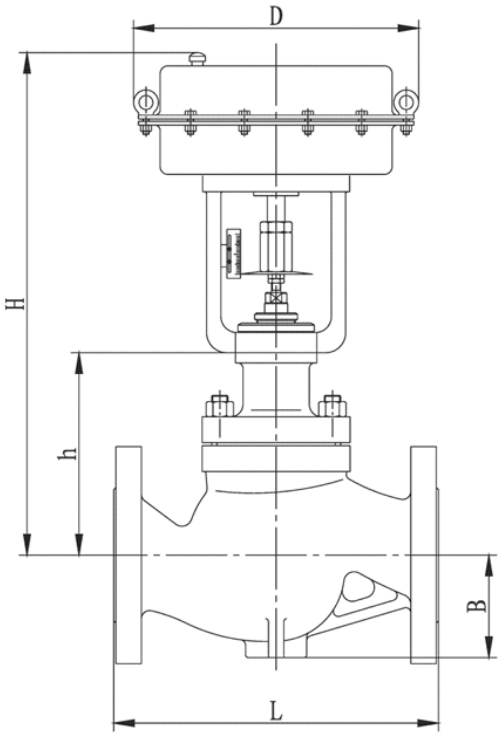

Nominal Diameter（DN）	Size（mm）				Air source port	Weight kg	Cv
	H1	H2	W	L			
15	385	115	152	285	1/4	17	6.0
20	420	150	184	285	1/4	19	9.5
25	420	150	184	285	1/4	22	13.4
32	464	174	222	285	1/4	28	22
40	464	174	222	285	1/4	35	30
50	469	179	254	285	1/4	45	47
65	590	220	276	360	1/4	76	82
80	579	209	298	360	1/4	82	108
100	603	232	352	360	1/4	110	195
125	683	313	400	470	1/4	135	224
150	785	327	451	470	1/4	180	400
200	866	407	543	470	1/4	250	691

Note: The Cv value in the table defaults to the maximum configuration of the specification, and there are other Cv values available for selection.

Valve working characteristics

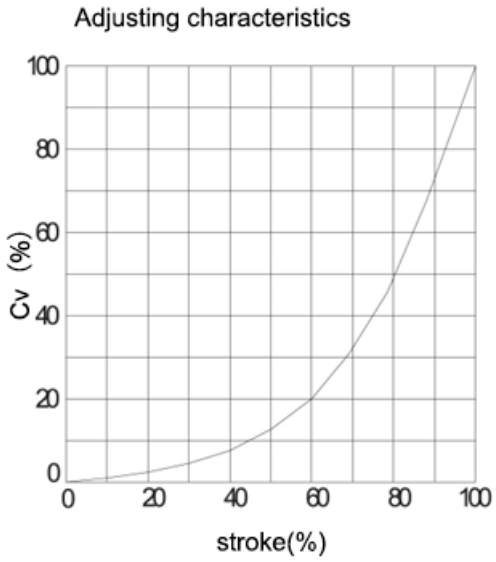

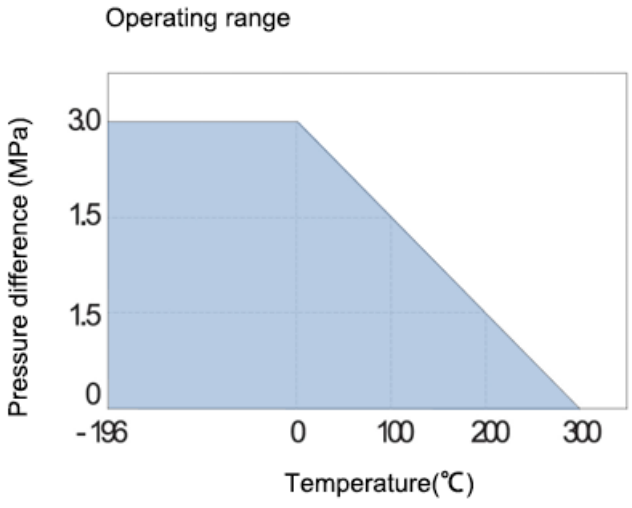

Design, materials, weights, and performance specifications are approximate and subject to change without notice. Please contact us for the latest information.

Fuchen intelligent Equipment (Hangzhou) Co., Ltd.
Tel:0571-82917716 Fax:0571-82917706
E-mail:fuchen@fuchensteam.com www.fuchensteam.com

Two-way Electric Regulating Globe Valve RVE Series



Product Description

Used as a control or shutoff valve in boilers, district heating and cooling systems, cooling towers, heating units, and air conditioning units. Suitable for closed or open systems (be careful to avoid cavitation).

1. Part of the long-stroke valve series
2. Excellent durability and easy maintenance
3. Offers a wide differential pressure range
4. Compatible with electric and electro-hydraulic actuators

Specification

No.	Name	RVE-1	RVE-2
1	Body	WCB	SS
2	Cover	WCB	SS
3	Connecting ring groove	SS	SS
4	Seal	SS/FEPM/PTFE	SS/FEPM/PTFE
5	Stem	SS	SS

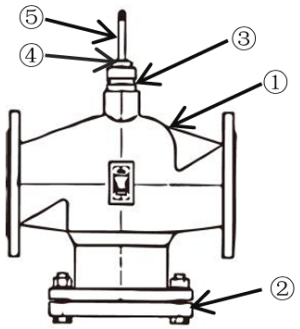

Flow characteristics

0-30%: Linear
30%-100%: Equal Percentage
For valves with large kvs values, the flow characteristics are optimized to achieve a maximum volume flow rate of kv100.

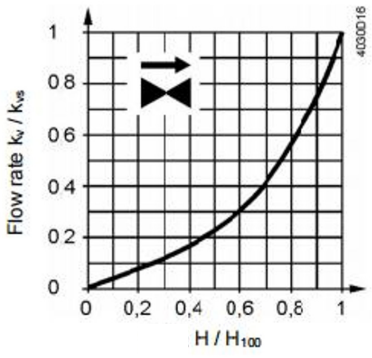

Fuchen intelligent Equipment (Hangzhou) Co., Ltd.
Tel:0571-82917716 Fax:0571-82917706
E-mail:fuchen@fuchensteam.com www.fuchensteam.com

Size(mm)

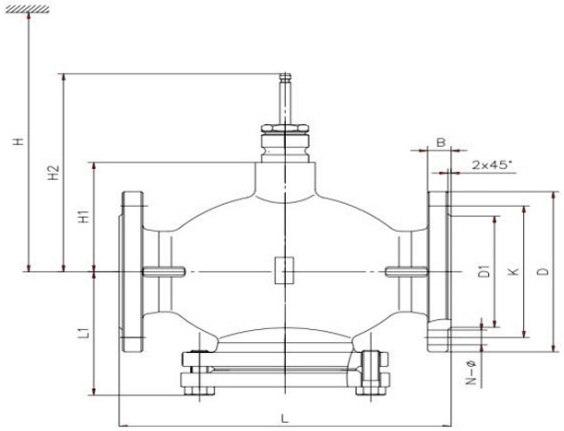

DN	L	L1	D		K		D1		N-φ		H1	H2	Hmin
			PN16	PN25	PN16	PN25	PN16	PN25	PN16	PN25			
20	150	85	105		75		55		4-14		51	147	457
25	160	88	115		85		65		4-14		56	152	462
32	180	121	135		100		78		4-18		91	187	497
40	200	113	145		110		85		4-18		97	193	503
50	230	118	160		125		100		4-18		107	203	513
65	290	130	150		145		120		4-18	8-18	120	216	526
80	310	148	195		160		135		8-18		133	229	539
100	350	160	215	230	180	190	155	160	8-18	8-23	144	240	550
125	400	180	245	270	210	220	185	168	8-18	8-25	161	277	667
150	480	215	280	300	240	250	210	218	8-23	8-25	186	302	692
200	495	230	335	360	295	310	265	278	12-23	12-25	174	290	780
250	622	313	405	425	355	370	320	332	12-25	12-30	226	342	732
300	711	347	460	485	410	430	375	390	12-25	16-30	238	354	744
350	787	400	520	550	470	490	430	448	16-25	16-34			
400	864	425	580	610	525	550	485	505	16-31	16-34			

Design, materials, weights, and performance specifications are approximate and subject to change without notice. Please contact us for the latest information.

Fuchen intelligent Equipment (Hangzhou) Co., Ltd.
Tel:0571-82917716 Fax:0571-82917706
E-mail:fuchen@fuchensteam.com www.fuchensteam.com

Safety Valve

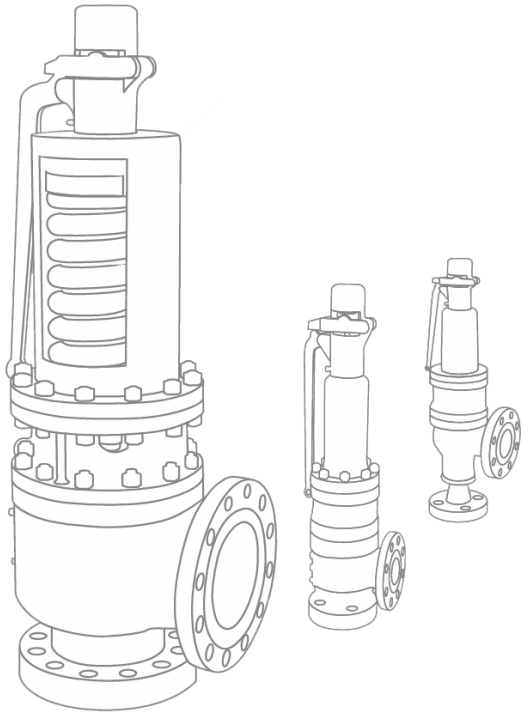

Fuchen intelligent Equipment (Hangzhou) Co., Ltd.
Tel:0571-82917716 Fax:0571-82917706
E-mail:fuchen@fuchensteam.com www.fuchensteam.com

Safety Valve

Safety valves are the optimal overpressure protection device for pressure-bearing equipment, containers, and pipelines. When the medium pressure rises above the allowable value, the safety valve automatically opens and discharges the full amount to prevent further pressure increase. When the pressure drops to the specified value, the safety valve automatically closes immediately. The closed bonnet of a closed safety valve prevents the intrusion of dust and debris, and prevents the escape of toxic and flammable media. The open bonnet of an open safety valve reduces the spring chamber's stagnation. They are primarily used in steam-containing pipelines and containers. Safety valves with radiators are primarily suitable for media temperatures exceeding 350°C. Spring-loaded safety valves with a wrench can be manually opened using a wrench when the medium pressure reaches over 75% of the opening pressure. Full-opening safety valves have an opening height ≥1/4 of the flow channel diameter, allowing for high discharge capacity. Micro-opening safety valves have an opening height of 1/20-1/40 of the flow channel diameter.

Safety valve model compilation method

A	4	8	Y	16	C
Type code (A indicates safety valve)	Connection Type Code (Table 1)	Structural form code (Table 2)	Valve seat sealing surface or lining material code (Table 3)	Nominal pressure value	Valve Body Material Code (Table 4)

Table 1

Connection type	Code
Internal thread	1
External thread	2
Flanged	4
Welding	6

Table 2

Safety valve structure				
Spring type	Closed	With heat sink	Full-opening	0
		Micro-opening		1
		Full-opening		2
	Not closed	With wrench	Full-opening	4
			Double spring micro-opening	3
			Micro-opening	7
			Full-opening	8
			Micro-opening	5
		With control mechanism	Full-opening	6
			Pulse	9

Table 3

Valve seat sealing surface or lining material	Code	Valve seat sealing surface or lining material	Code
Copper alloy	T	Alloy steel	H
Rubber	X	Nitriding steel	D
Nylon plastic	N	Cemented carbide	Y
Fluoroplastic	F	Rubber lining	J
Tin-based bearing alloys (Babbitt alloys)	B	Enamel	C

Table 4

Body material	Code	Body material	Code
HT250	Z	304 CF8	P
WCB ZG230-450	C	316 CF8M	R
15CrMo.Cr5Mo	I	15CrMoV	V

Note: For gray cast iron valve bodies with PN ≤ 1.6 MPa and carbon steel valve bodies with PN ≥ 2.5 MPa, this code is omitted.

Design, materials, weights, and performance specifications are approximate and subject to change without notice. Please contact us for the latest information.

Fuchen intelligent Equipment (Hangzhou) Co., Ltd.
Tel:0571-82917716 Fax:0571-82917706
E-mail:fuchen@fuchensteam.com www.fuchensteam.com

Safety Valve

Safety valve set pressure classification

Pressure (MPa)	Set pressure classification								
1.6	0.06-0.1	0.1-0.16	0.16-0.25	0.25-0.4	0.4-0.6	0.6-0.8	0.8-1.0	1.0-1.3	1.3-1.6
2.5	＞1.3-1.6	＞1.6-2.0	＞2.0-2.5						
4.0	＞1.3-1.6	＞1.6-2.0	＞2.0-2.5	＞2.5-3.2	＞3.2-4.0				
6.4	＞2.5-3.2	＞3.2-4.0	＞4.0-5.0	＞5.0-6.4					
10.0	＞4.0-5.0	＞5.0-6.4	＞6.4-8.0	＞8.0-10					
16.0	＞10-13	＞13-16							
32.0	＞16-19	＞19-22	＞22-25	＞25-29	＞29-32				

Safety valve inlet and outlet flange regulations

Safety valve nominal pressure	1.6	2.5	4.0	6.4	10.0	16.0	32.0
Inlet flange pressure level	1.6	2.5	4.0	6.4	10.0	16.0	32.0
Outlet flange pressure level	1.6	1.6	1.6	4.0	4.0	4.0/16.0	16.0

Safety valve type	Micro-opening	Full-opening
Inlet diameter		Same nominal diameter
Outlet diameter	Same nominal diameter	One or more steps larger than the nominal diameter

Fuchen intelligent Equipment (Hangzhou) Co., Ltd.
Tel:0571-82917716 Fax:0571-82917706
E-mail:fuchen@fuchensteam.com www.fuchensteam.com

A48/44 Series With Wrench Spring Full-opening Safety Valve

A48Y-16C A44Y-16P
A48Y-25 A44Y-25P
A48Y-40 A44Y-40P
A48Y-64 A44Y-64P
A48Y-100 A44Y-100P

A44Y-16C A44Y-16R
A44Y-25 A44Y-25R
A44Y-40 A44Y-40R
A44Y-64 A44Y-64R
A44Y-100 A44Y-100R

The A48Y type is suitable for equipment and pipelines with mediums such as steam and air with working temperature ≤ 350℃. The A44Y type is suitable for equipment or pipelines with mediums such as air and oil with working temperature ≤ 300 ℃ as an overpressure protection device.

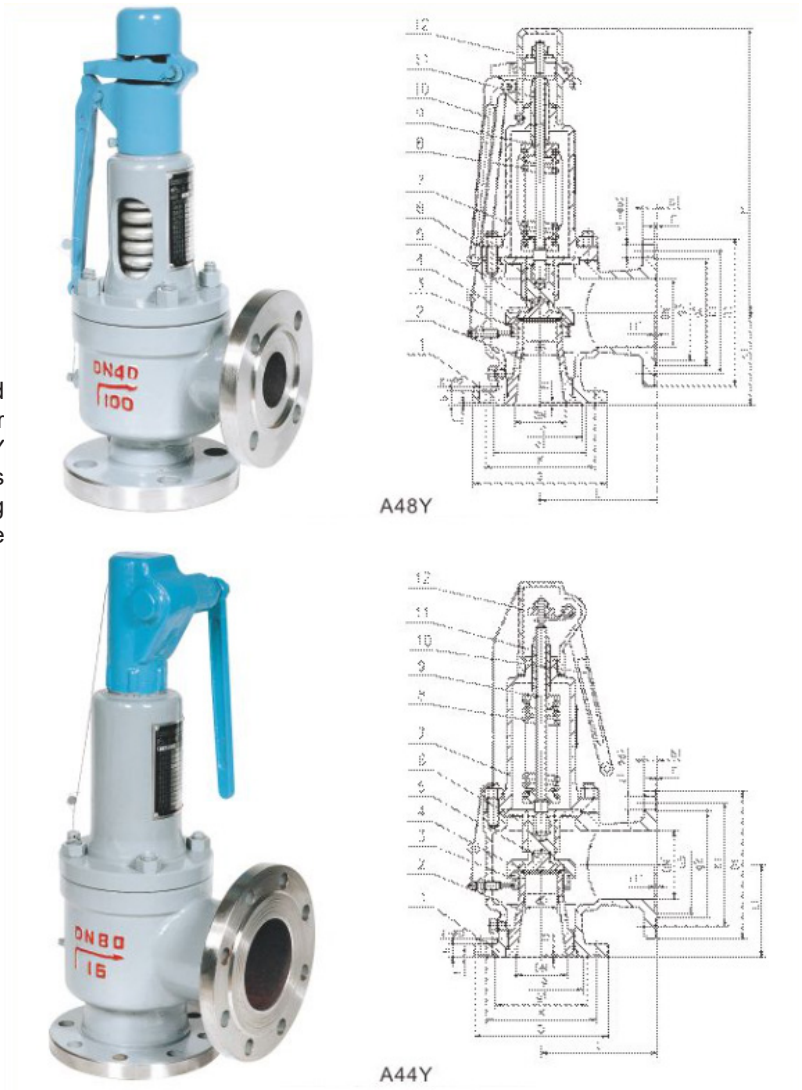

Material

NO.	Part Name	A48Y-C A44Y-C Material	A44Y-P Material	A44Y-R Material
1	Body	WCB	ZG1Cr18Ni9Ti	CF8M
2	Seat	2Cr13	1Cr18Ni9Ti	316
3	Adjustment ring	ZG2Cr13	ZG1Cr18Ni9Ti	0Cr18Ni12Mo2Ti
4	Recoil Plate	ZG2Cr13	ZG1Cr18Ni9Ti	316
5	Disc	2Cr13	1Cr18Ni9Ti	316
6	Guide sleeve	2Cr13	1Cr18Ni9Ti	0Cr18Ni12Mo2Ti
7	Cover	ZG230-450	ZG230-450	ZG230-450
8	Spring	50CrVA	50CrVA Covering fluoroplastic	50CrVA Covering fluoroplastic
9	Stem	2Cr13	1Cr18Ni9Ti	1Cr18Ni12Mo2Ti
10	Wrench	ZG200-400	ZG200-400	ZG200-400
11	Adjusting screw	45	2Cr13	2Cr13
12	Protective cover	ZG200-400	ZG200-400	316
	Sealing surface	Co-based cemented carbide surfacing		

Design, materials, weights, and performance specifications are approximate and subject to change without notice. Please contact us for the latest information.

Fuchen intelligent Equipment (Hangzhou) Co., Ltd.
Tel:0571-82917716 Fax:0571-82917706
E-mail:fuchen@fuchensteam.com www.fuchensteam.com

Size(mm)

Type	(DN)	do	D	K	g	g1	b	f	f1	Z-ϕd	DN'	D1	k1	g3	g2	b1	f'	f1'	Z1-ϕd1	L	L1	≈H
A48Y-16C A44Y-16C A44Y-16P A44Y-16R	20	15	105	75		55	16	2		4-14	25	115	85		65	16	2		4-14	110	95	411
	25	16	115	85		65	16	2		4-14	32	140	100		78	18	2		4-18	110	95	411
	32	20	140	100		78	18	2		4-18	40	150	110		85	18	3		4-18	115	100	411
	40	25	150	110		85	18	3		4-18	50	165	125		100	20	3		4-18	120	110	472
	50	32	165	125		100	20	3		4-18	65	185	145		120	20	3		4-18	135	120	532
	65	40	185	145		120	20	3		4-18	80	200	160		135	20	3		8-18	160	140	556
	80	50	200	160		135	20	3		8-18	100	220	180		155	22	3		8-18	170	135	561
	100	65	220	180		155	20	3		8-18	125	250	210		185	22	3		8-18	195	175	667
	125	80	250	210		185	22	3		8-18	150	285	240		210	24	3		8-23	210	190	857
	150	100	285	240		210	24	3		8-23	175	310	270		240	26	3		8-23	255	230	915
	200	125	340	295		265	26	3		12-23	250	405	355		320	30	3		12-26	300	260	1073
	250	150	405	355		320	30	3		12-26	300	460	410		375	30	4		12-26	350	320	1307
	300	220	460	410		375	30	4		12-26	400	580	525		485	36	4		16-30	370	350	1233
	350	250	520	470		435	34	4		16-26	500	715	650		608	44	4		20-34	500	450	1711
	400	280	580	525		485	36	4		16-30	500	715	650		608	44	4		20-34	500	450	1780
A48Y-25 A44Y-25 A44Y-25P A44Y-25R	20	15	105	75		55	16	2		4-14	25	115	85		65	16	2		4-14	110	95	411
	25	16	115	85		65	16	2		4-14	32	140	100		78	18	2		4-18	110	95	411
	32	20	140	100		78	18	2		4-18	40	150	110		85	18	3		4-18	115	100	411
	40	25	150	110		85	18	3		4-18	50	165	125		100	20	3		4-18	120	110	472
	50	32	165	125		100	20	3		4-18	65	185	145		120	20	3		4-18	135	120	532
	65	40	185	145		120	22	3		8-18	80	200	160		135	20	3		8-18	160	140	556
	80	50	200	160		135	22	3		8-18	100	220	180		155	22	3		8-18	170	135	561
	100	65	230	190		160	24	3		8-23	125	250	210		185	22	3		8-18	195	175	667
	125	80	270	220		188	28	3		8-26	150	285	240		210	24	3		8-23	210	190	857
	150	100	300	250		218	30	3		8-26	175	310	270		240	26	3		8-23	255	230	915
	200	125	360	310		278	34	3		12-26	250	405	355		320	30	3		12-26	300	260	1073
	250	150	425	370		332	36	3		12-30	300	460	410		375	30	4		12-26	350	320	1307
	300	220	485	430		390	40	4		16-30	400	580	525		485	36	4		16-30	370	350	1233
	350	250	555	490		448	44	4		16-34	500	715	650		608	44	4		20-34	500	450	1711
	400	280	620	550		505	48	4		16-36	500	715	650		608	44	4		20-34	500	450	1780
A48Y-40 A44Y-40 A44Y-40P A44Y-40R	20	15	105	75	51	55	16	2	4	4-14	25	115	85		65	16	2		4-14	110	95	411
	25	16	115	85	58	65	16	2	4	4-14	32	140	100		78	18	2		4-18	110	95	411
	32	20	140	100	66	78	18	2	4	4-18	40	150	110		85	18	3		4-18	115	100	411
	40	25	150	110	76	85	18	3	4	4-18	50	165	125		100	20	3		4-18	120	110	472
	50	32	165	125	88	100	20	3	4	4-18	65	185	145		120	20	3		4-18	135	120	532
	65	40	185	145	110	120	22	3	4	8-18	80	200	160		135	20	3		8-18	160	140	556
	80	50	200	160	121	135	22	3	4	8-18	100	220	180		155	22	3		8-18	170	135	561
	100	65	235	190	150	160	24	3	4.5	8-23	125	250	210		185	22	3		8-18	195	175	697
	125	80	270	220	176	188	28	3	4.5	8-26	150	285	240		210	24	3		8-23	210	190	857
	150	100	300	250	204	218	30	3	4.5	8-26	175	310	270		240	26	3		8-23	255	230	915
	200	125	375	320	260	282	38	3	4.5	12-30	250	405	355		320	30	3		12-26	300	260	1073
	250	150	450	385	313	345	42	3	4.5	12-34	300	460	410		375	30	4		12-26	350	320	1307
	300	220	515	450	364	408	46	4	4.5	16-34	400	580	525		485	36	4		16-30	370	350	1233
	350	250	580	510	422	465	52	4	5	16-36	500	715	650		608	44	4		20-34	500	450	1711
	400	280	660	585	474	535	58	4	5	16-41	500	715	650		608	44	4		20-34	500	450	1711
A48Y-64 A44Y-64 A44Y-64P A44Y-64R	20	10	125	90	51	68	22	2	4	4-18	25	115	85	58	65	16	2	4	4-14	110	100	297
	25	16	140	100	58	78	22	2	4	4-18	32	140	100	66	78	18	2	4	4-18	110	100	310
	32	20	155	110	66	82	24	2	4	4-23	40	150	110	76	85	18	3	4	4-18	130	110	322
	40	25	170	125	76	95	24	3	4	4-23	50	165	125	88	100	20	3	4	4-18	130	120	352
	50	32	180	135	88	105	26	3	4	4-23	65	185	145	110	120	22	3	4	8-18	155	130	425
	65	40	205	160	110	130	28	3	4	8-23	80	200	160	121	135	22	3	4	8-18	175	160	570
	80	50	215	170	121	140	30	3	4	8-23	100	235	190	150	160	24	3	4.5	8-23	175	160	560
	100	65	250	200	150	168	32	3	4.5	8-26	125	270	220	176	188	28	3	4.5	8-25	195	195	690
	150	100	345	280	204	240	38	3	4.5	8-34	200	375	320	260	282	38	3	4.5	12-30	285	260	935
A48Y-100 A44Y-100 A44Y-100P A44Y-100R	20	10	125	90	51	68	22	2	4	4-18	25	115	85	58	65	16	2	4	4-14	96	85	297
	25	16	140	100	58	78	24	2	4	4-18	32	140	100	66	78	18	2	4	4-18	110	100	310
	32	20	155	110	66	82	24	2	4	4-23	40	150	110	76	85	18	3	4	4-18	130	110	322
	40	25	170	125	76	95	26	3	4	4-23	50	165	125	88	100	20	3	4	4-18	130	120	352
	50	32	195	145	88	112	28	3	4	4-26	65	185	145	110	120	22	3	4	8-18	155	130	425
	65	32	220	170	110	138	32	3	4	8-26	80	200	160	121	135	22	3	4	8-18	175	160	570
	80	40	230	180	121	148	34	3	4	8-26	100	235	190	150	160	24	3	4.5	8-23	175	160	560
	100	50	265	210	150	172	38	3	4.5	8-30	125	270	220	176	188	28	3	4.5	8-25	195	195	690
	150	80	355	290	204	250	46	3	4.5	12-34	200	375	320	260	282	38	3	4.5	12-30	285	260	935

Fuchen intelligent Equipment (Hangzhou) Co., Ltd.
Tel:0571-82917716 Fax:0571-82917706
E-mail:fuchen@fuchensteam.com www.fuchensteam.com

A47 Series With Wrench Spring Micro-opening Safety Valve

A47H-16C A47Y-64
A47H-25 A47H-64
A47H-40 A47Y-100
A47H-100

A47 is suitable for use as an overpressure protection device on equipment and pipelines with steam, air and other media with an operating temperature of ≤350℃ .



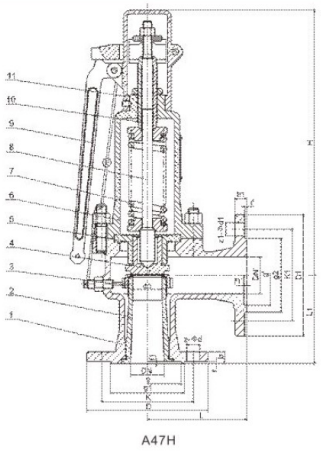

Material

NO.	Part Name	A48Y-C A44Y-C Material
1	Body	WCB
2	Seat	ZG2Cr13
3	Adjustment ring	ZG2Cr13
4	Disc	2Cr13
5	Guide sleeve	2Cr13
6	Cover	ZG230-450
7	Spring	50CrVA
8	Stem	2Cr13
9	Wrench	ZG200-400
10	Adjusting screw	45
11	Protective cover	ZG200-400
	Sealing surface	"H"Surfacing D507,"Y"Co-based cemented carbide surfacing

Design, materials, weights, and performance specifications are approximate and subject to change without notice. Please contact us for the latest information.

Fuchen intelligent Equipment (Hangzhou) Co., Ltd.
Tel:0571-82917716 Fax:0571-82917706
E-mail:fuchen@fuchensteam.com www.fuchensteam.com

Size(mm)

Type	(DN)	do	D	K	g	g_1	b	f	f_1	Z-ϕd	DN'	D_1	k_1	g_2	g'	b_1	f'	f_1'	Z_1-ϕd_1	L	L_1	≈H
A47H-16C	20	15	105	75		55	16	2		4-14	20	105	75	55		16	2		4-14	100	85	270
	25	20	115	85		65	16	2		4-14	25	115	85	65		16	2		4-14	100	85	270
	32	25	140	100		78	18	2		4-18	32	140	100	78		18	2		4-18	115	100	312
	40	32	150	110		85	18	3		4-18	40	150	110	85		18	3		4-18	120	110	320
	50	40	165	125		100	20	3		4-18	50	165	125	100		20	3		4-18	135	120	390
	65	50	185	145		120	20	3		4-18	65	185	145	120		20	3		4-18	140	130	395
	80	65	200	160		135	20	3		8-18	80	200	160	135		20	3		8-18	160	135	400
	100	80	220	180		155	22	3		8-18	100	220	180	155		22	3		8-18	170	160	600
	125	100	250	210		185	22	3		8-18	125	250	210	185		22	3		8-18	190	190	620
	150	125	285	240		210	24	3		8-23	150	285	240	210		24	3		8-23	205	195	625
	200	150	340	295		265	26	3		12-23	200	340	295	265		26	3		12-23	240	230	798
	250	200	405	355		320	30	3		12-26	250	405	355	320		30	3		12-26	350	320	981
	300	250	460	410		375	30	4		12-26	300	460	410	375		30	4		12-26	370	300	1005
A47H-25	20	15	105	75		55	16	2		4-14	20	105	75	55		16	2		4-14	100	85	270
	25	20	115	85		65	16	2		4-14	25	115	85	65		16	2		4-14	100	85	270
	32	25	140	100		78	18	2		4-18	32	140	100	78		18	2		4-18	115	100	312
	40	32	150	110		85	18	3		4-18	40	150	110	85		18	3		4-18	120	110	320
	50	40	165	125		100	20	3		4-18	50	165	125	100		20	3		4-18	135	120	390
	65	50	185	145		120	22	3		8-18	65	185	145	120		20	3		4-18	140	130	395
	80	65	200	160		135	24	3		8-18	80	200	160	135		20	3		8-18	160	135	400
	100	80	230	190		160	24	3		8-23	100	220	180	155		20	3		8-18	170	160	600
	125	100	270	220		188	28	3		8-26	125	250	210	185		22	3		8-18	190	190	620
	150	125	300	250		218	30	3		8-26	150	285	240	210		24	3		8-23	205	195	625
	200	150	360	310		278	34	3		12-26	200	340	295	265		26	3		12-23	240	230	798
	250	200	425	370		332	36	3		12-30	250	405	355	320		30	3		12-26	350	320	981
	300	250	485	430		390	40	4		16-30	300	460	410	375		30	4		12-26	370	300	1005
A47H-40	20	15	105	75	51	55	16	2	4	4-14	20	105	75	55		16	2		4-14	100	85	270
	25	20	115	85	58	65	16	2	4	4-14	25	115	85	65		16	2		4-14	100	85	270
	32	25	140	100	66	78	18	2	4	4-18	32	140	100	78		18	2		4-18	115	100	312
	40	32	150	110	76	85	18	3	4	4-18	40	150	110	85		18	3		4-18	120	110	320
	50	40	165	125	88	100	20	3	4	4-18	50	165	125	100		20	3		4-18	135	120	390
	65	50	185	145	110	120	22	3	4	8-18	65	185	145	120		20	3		4-18	140	130	395
	80	65	200	160	121	135	22	3	4	8-18	80	200	160	135		20	3		8-18	160	135	400
	100	80	235	190	150	160	24	3	4.5	8-23	100	220	180	155		22	3		8-18	170	160	600
	125	100	270	220	176	188	28	3	4.5	8-26	125	250	210	185		22	3		8-18	190	190	620
	150	125	300	250	204	218	30	3	4.5	8-26	150	285	240	210		24	3		8-23	205	195	625
	200	150	375	320	260	282	38	3	4.5	12-30	200	340	295	265		26	3		12-23	240	230	798
	250	200	450	385	313	345	42	3	4.5	12-34	250	405	355	320		30	3		12-26	350	320	981
	300	250	515	450	364	408	46	4	4.5	16-34	300	460	410	375		30	4		12-26	370	300	1005
A47H-64 A47Y-64	20	15	130	90	51	68	20	2	4	4-18	20	105	75	55	51	16	2	4	4-14	100	95	301
	25	20	140	100	58	78	22	2	4	4-18	25	115	85	65	58	16	2	4	4-14	100	95	301
	32	25	155	110	66	82	24	2	4	4-23	32	140	100	78	66	18	2	4	4-18	115	105	312
	40	32	170	125	76	95	24	3	4	4-23	40	150	110	85	76	18	3	4	4-18	135	115	366
	50	40	180	135	88	105	26	3	4	4-23	50	165	125	100	88	20	3	4	4-18	160	125	396
	65	50	205	160	110	130	28	3	4	8-23	65	185	145	120	110	22	3	4	8-18	175	160	570
	80	65	215	170	121	140	30	3	4	8-23	80	200	160	135	121	22	3	4	8-18	175	160	565
	100	80	250	200	150	168	32	3	4.5	8-26	100	235	190	160	150	24	3	4.5	8-23	190	180	597
	150	100	345	280	204	240	38	3	4.5	8-34	150	300	250	218	204	30	3	4.5	8-26	280	260	738
A47H-100 A47Y-100	20	15	130	90	51	68	22	2	4	4-18	20	105	75	55	51	16	2	4	4-14	100	95	301
	25	20	140	100	58	78	24	2	4	4-18	25	115	85	65	58	16	2	4	4-14	100	95	301
	32	25	155	110	66	82	24	2	4	4-23	32	140	100	78	66	18	2	4	4-18	115	105	312
	40	32	170	125	76	95	26	3	4	4-23	40	150	110	85	76	18	3	4	4-18	135	115	366
	50	40	195	145	88	112	28	3	4	4-26	50	165	125	100	88	20	3	4	4-18	160	125	396
	65	50	220	170	110	138	32	3	4	8-26	65	185	145	120	110	22	3	4	8-18	175	160	570
	80	65	230	180	121	148	34	3	4	8-26	80	200	160	135	121	22	3	4	8-18	175	160	565
	100	80	265	210	150	172	38	3	4.5	8-30	100	235	190	160	150	24	3	4.5	8-23	190	180	597
	150	100	355	290	204	250	46	3	4.5	12-34	150	300	250	218	204	30	3	4.5	8-26	280	260	738

Fuchen intelligent Equipment (Hangzhou) Co., Ltd.
Tel:0571-82917716 Fax:0571-82917706
E-mail:fuchen@fuchensteam.com www.fuchensteam.com

A28 Series With Handle Spring Full-opening Safety Valve

A28H-10　A28H-16
A28Y-10P　A28Y-16P
A28Y-10R8　A28Y-16R8
A28Y-25R8　A28Y-40R8

The A28H type is suitable for equipment or pipelines with media such as air, steam, water, nitrogen-hydrogen mixture, etc. at a working temperature of ≤200 ℃ . The A28Y-P/10R8 is suitable for equipment or pipelines with corrosive media at a working temperature of ≤200℃ as an over-pressure protection device.

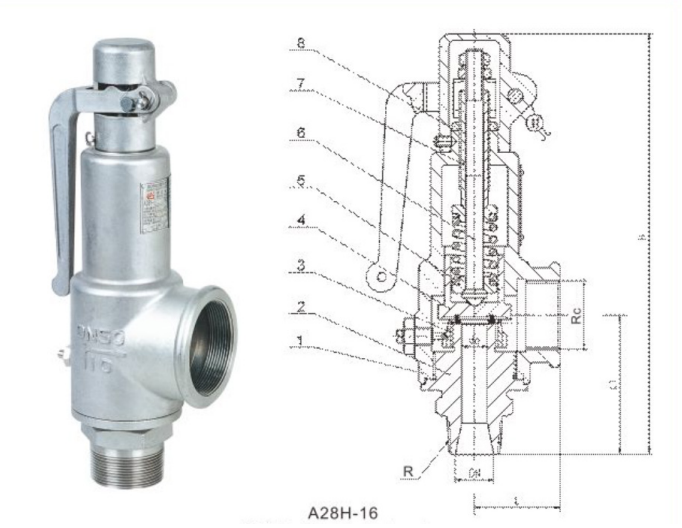

A28H-16

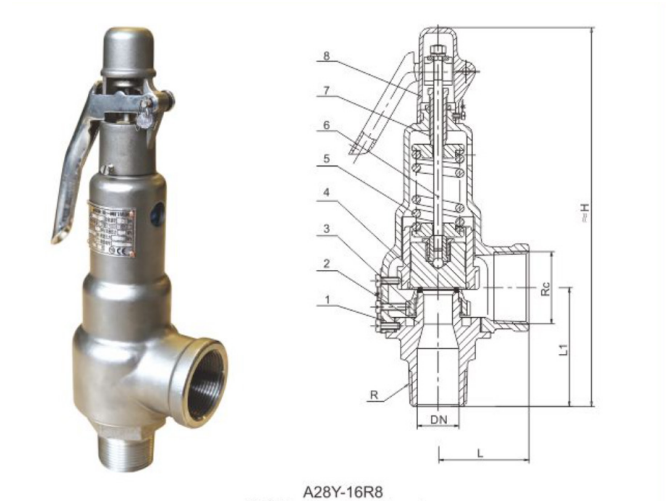

A28Y-16R8

Material

NO.	Part Name	A28H Material	A28Y-P Material	A28Y-R8 Material
1	Body	HT200	ZG1Cr18Ni9Ti	CF8M
2	Seat	35	ZG1Cr18Ni9Ti	CF8M
3	Adjustment ring	2Cr13	1Cr18Ni9Ti	316
4	Disc	2Cr13	1Cr18Ni9Ti	316
5	Spring	50CrVA	50CrVA Covering fluoroplastic	50CrVA Covering fluoroplastic
6	Stem	2Cr13	2Cr13	316
7	Adjusting screw	45	2Cr13	316
8	Protective cover	ZG200-400	ZG200-400	CF8M
	Sealing surface	Surfacing D507	Co-based cemented carbide surfacing	

Design, materials, weights, and performance specifications are approximate and subject to change without notice. Please contact us for the latest information.
Fuchen intelligent Equipment (Hangzhou) Co., Ltd.
Tel:0571-82917716　Fax:0571-82917706
E-mail:fuchen@fuchensteam.com　www.fuchensteam.com

A28H Size(mm)

Nominal diameter DN(mm)	Dimensions (mm)					
	do	R	Rc	L	L_1	H
15	10	1/2 "	3/4 "	37	65	196
20	12	3/4 "	1 "	40	70	215
25	15	1 "	1 1/4 "	45	78	234
32	20	1 1/4 "	1 1/2 "	60	90	302
40	25	1 1/2 "	2 "	67	105	326
50	32	2 "	2 1/2 "	76	115	348
65	40	2 1/2 "	3 "	110	145	370
80	50	3 "	4 "	110	145	410

A28Y Size(mm)

Nominal diameter DN(mm)	Dimensions (mm)					
	do	R	Rc	L	L_1	H
15	10	1/2 "	3/4 "	41	53	165
20	13	3/4 "	1 "	45	60	195
25	16.5	1 "	1 1/4 "	52	68	210
32	22	1 1/4 "	1 1/2 "	65	80	305
40	27	1 1/2 "	2 "	75	95	320
50	34	2 "	2 1/2 "	85	108	352
65	42	2 1/2 "	3 "	105	125	415
80	48	3 "	4 "	115	140	468

Fuchen intelligent Equipment (Hangzhou) Co., Ltd.
Tel:0571-82917716 Fax:0571-82917706
E-mail:fuchen@fuchensteam.com www.fuchensteam.com

A27 Series With Handle Spring Full-opening Safety Valve

A27H-10 A27H-25
A27Y-10P A27Y-25P
A27Y-10R A27Y-25R
A27H-16 A27H-40
A27Y-16P A27Y-40P
A27Y-16R A27Y-40R

The A27H is suitable for equipment or pipelines with water, air, steam and other media with working temperature ≤ 200℃ . The A27Y is suitable for equipment or pipelines with corrosive media with working temperature ≤ 200 ℃ as an over-pressure protection device.



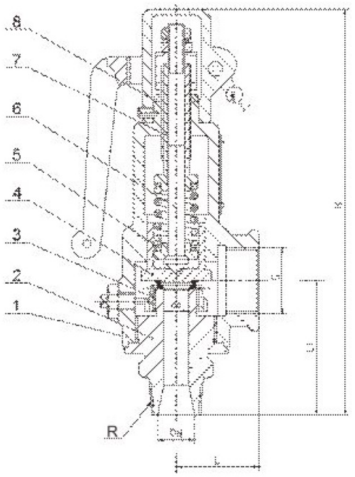

A27H (W)

Material

NO.	Part Name	A27H Material	A27W-P Material	A27W-R Material
1	Body	HT350	ZG1Cr18Ni9Ti	ZG1Cr18Ni12Mo2Ti
2	Seat	35	ZG1Cr18Ni9Ti	ZG1Cr18Ni12Mo2Ti
3	Adjustment ring	2Cr13	1Cr18Ni9Ti	1Cr18Ni12Mo2Ti
4	Disc	2Cr13	1Cr18Ni9Ti	1Cr18Ni12Mo2Ti
5	Spring	50CrVA	50CrVA Covering fluoroplastic	50CrVA Covering fluoroplastic
6	Stem	2Cr13	2Cr13	1Cr18Ni9Ti
7	Adjusting screw	45	2Cr13	1Cr18Ni9Ti
8	Protective cover	ZG200-400	ZG200-400	1Cr18Ni9Ti
	Sealing surface	Surfacing D507	Co-based cemented carbide surfacing	

Size(mm)

Nominal diameter DN(mm)	Dimensions (mm)					
	do	R	L	L_1	G	H
15	10	1/2 "	40	65	1/2 "	135
20	15	3/4 "	45	65	3/4 "	140
25	20	1 "	45	76	1 "	155
32	25	1 1/4 "	55	85	1 1/4 "	170
40	32	1 1/2 "	60	85	1 1/2 "	310
50	40	2 "	67	105	2 "	322
65	50	2 1/2 "	76	128	2 1/2 "	344
80	65	3 "	110	145	3 "	395

Design, materials, weights, and performance specifications are approximate and subject to change without notice. Please contact us for the latest information.

Fuchen intelligent Equipment (Hangzhou) Co., Ltd.
Tel:0571-82917716 Fax:0571-82917706
E-mail:fuchen@fuchensteam.com www.fuchensteam.com

Bellows Globe Valve

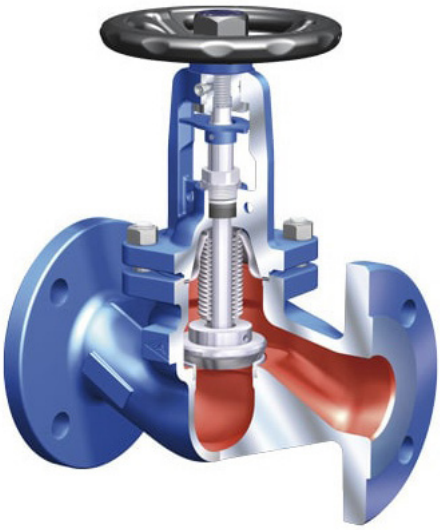

Fuchen intelligent Equipment (Hangzhou) Co., Ltd.
Tel:0571-82917716 Fax:0571-82917706
E-mail:fuchen@fuchensteam.com www.fuchensteam.com

Bellows Sealed Globe Valve



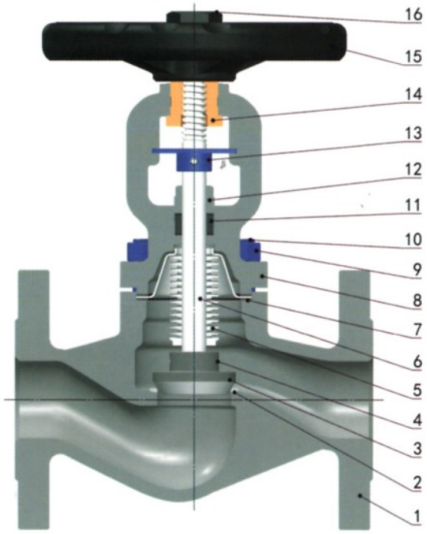

Product Description

1.The valve body utilizes German coated sand casting technology, significantly improving surface finish and mechanical properties, reducing the occurrence of pores, pinholes, and cracks, and enhancing the tensile strength of the casting.
2.When the valve is closed, the tapered sealing surface with a "scraping effect" automatically removes surface impurities, ensuring a reliable seal and a longer service life.
3.The double sealing design (bellows + packing) complies with international sealing standards.
4.All bellows and valves are 100% ammonia-tested, ensuring zero leakage.
5.Products larger than DN150 are equipped with a special device to effectively prevent valve vibration, noise, and internal component damage during use, effectively extending service life by over 150%.
6.Various disc designs are available, including throttling discs, flat soft-seal discs, and stop-check discs, depending on the operating requirements.

Performance Specifications			
Nominal pressure		PN	
Test pressure	Strength test	1.5×Pr	MPa
	Sealing test	1.1×Pr	
	Airtightness test	0.6	
	Bellows assembly test	1.5×Pr	
Applicable temperature		-196℃ ~600℃	
Note: Pr is the pressure rating of the material at room temperature, unit: MPa.			

Material

No.	Name	Material	No.	Name	Material
1	Body	GS-C25、GGG-40、CF8M	9	Hexagonal nut	ASTM A194-2H、A194-8
2	Seat	13Cr、SSS304、SSS316、Stellite	10	Stud bolts	ASTM A193-B7、A193-B8
3	Disc	13Cr、F304、F316+Stellite	11	Filler	Flexible graphite、PTFE
4	Cylindrical lock	SSS304、SSS316	12	Pressed sleeve	1025、SS304、SS316
5	Bellows Assemblies	SSS304、SSS316L	13	Positioning film	1025、WCB、CF8
6	Stem	20Cr13、F304、F316	14	Valve nut	Copper alloy、D2、BL-2
7	Gasket	Flexible graphite+stainless steel PTFE	15	Handwheel	Carbon steel、KTH330
8	Cover	GS-C25、GGG-40、CF8M	16	Cap	A105

Design, materials, weights, and performance specifications are approximate and subject to change without notice. Please contact us for the latest information.

Fuchen intelligent Equipment (Hangzhou) Co., Ltd.
Tel:0571-82917716 Fax:0571-82917706
E-mail:fuchen@fuchensteam.com www.fuchensteam.com

Size(mm)

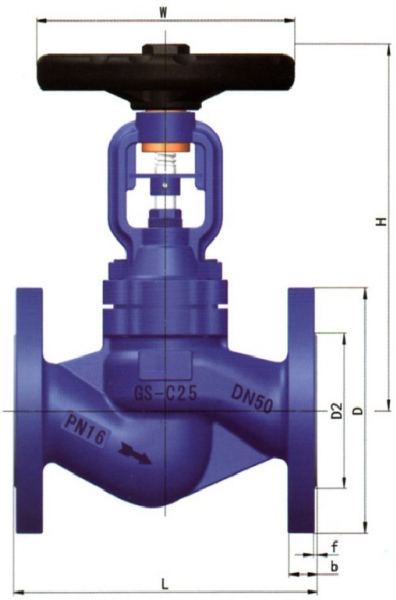

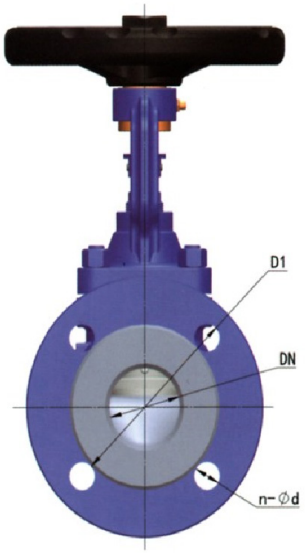

Size	L	D	D1	D2	b	f	n-φd	W	H
DN	PN16								
15	130	95	65	45	16	2	4-φ14	φ140	192
20	150	105	75	58	18	2	4-φ14	φ140	192
25	160	115	85	68	18	2	4-φ14	φ160	207
32	180	140	100	78	18	2	4-φ18	φ160	207
40	200	150	110	88	18	3	4-φ18	φ180	245
50	230	165	125	102	18	3	4-φ18	φ200	253
65	290	185	145	122	18	3	4-φ18	φ220	295
80	310	200	160	138	20	3	8-φ18	φ250	328
100	350	220	180	158	20	3	8-φ18	φ300	385
125	400	250	210	188	22	3	8-φ18	φ350	427
150	480	285	240	212	22	3	8-φ22	φ400	480
200	600	340	295	268	24	3	12-φ22	φ450	672
250	730	405	355	320	26	3	12-φ26	φ550	775
300	850	460	410	378	28	4	12-φ26	φ600	852
350	980	520	470	438	30	4	16-φ26	φ700	1005
400	1100	580	525	490	32	4	16-φ30	φ700	1140
PN25									
15	130	95	65	45	16	2	4-φ14	φ140	192
20	150	105	75	58	18	2	4-φ14	φ140	192
25	160	115	85	68	18	2	4-φ14	φ160	207
32	180	140	100	78	18	2	4-φ18	φ160	207
40	200	150	110	88	18	3	4-φ18	φ180	245
50	230	165	125	102	20	3	4-φ18	φ200	253
65	290	185	145	122	22	3	8-φ18	φ220	295
80	310	200	160	138	24	3	8-φ18	φ250	328
100	350	235	190	162	24	3	8-φ22	φ300	385
125	400	270	220	188	26	3	8-φ26	φ350	427
150	480	300	250	218	28	3	8-φ26	φ400	480
200	600	360	310	278	30	3	12-φ26	φ450	672
250	730	425	370	335	32	3	12-φ30	φ550	775
300	850	485	430	395	34	4	16-φ30	φ600	852
350	980	555	490	450	38	4	16-φ33	φ700	1005
400	1100	620	550	505	40	4	16-φ36	φ700	1140
PN40									
15	130	95	65	45	16	2	4-φ14	φ140	192
20	150	105	75	58	18	2	4-φ14	φ140	192
25	160	115	85	68	18	2	4-φ14	φ160	207
32	180	140	100	78	18	2	4-φ18	φ160	207
40	200	150	110	88	18	3	4-φ18	φ180	245
50	230	165	125	102	20	3	4-φ18	φ200	253
65	290	185	145	122	22	3	8-φ18	φ220	295
80	310	200	160	138	24	3	8-φ18	φ250	328
100	350	235	190	162	24	3	8-φ22	φ300	385
125	400	270	220	188	26	3	8-φ26	φ350	427
150	480	300	250	218	28	3	8-φ26	φ400	480
200	600	375	320	285	34	3	12-φ30	φ450	672
250	730	450	385	345	38	3	12-φ33	φ550	775
300	850	515	450	410	42	4	16-φ33	φ600	852
350	980	580	510	465	46	4	16-φ36	φ700	1005
400	1100	660	585	535	50	4	16-φ39	φ700	1140

Technical specifications

Design standard: EN 12516

Structural length: EN 558

Connecting flange: EN1092-1

Testing and Inspection: EN 12266

For other specifications, please consult the manufacturer

Fuchen intelligent Equipment (Hangzhou) Co., Ltd.

Tel:0571-82917716 Fax:0571-82917706

E-mail:fuchen@fuchensteam.com www.fuchensteam.com

Ball Valve





Design, materials, weights, and performance specifications are approximate and subject to change without notice. Please contact us for the latest information.

Fuchen intelligent Equipment (Hangzhou) Co., Ltd.
Tel:0571-82917716 Fax:0571-82917706
E-mail:fuchen@fuchensteam.com www.fuchensteam.com

Manual Ball Valve

Product Features

The valve body is made of precision casting, which ensures the safety of the use process and meets the requirements of better appearance. The ball valve also has a pressure balance hole, double butterfly shaped shrapnel, anti-static device, stem explosion-proof device and other special designs, to give the user a safer, more convenient and more effective use of the feeling.

Assembly Drawing:

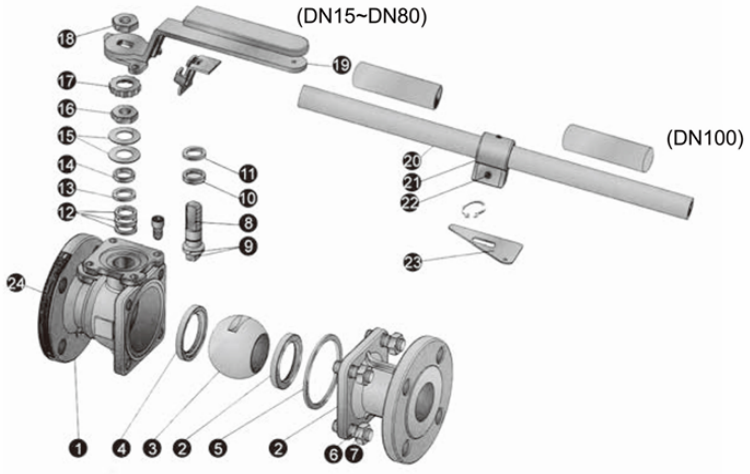

Materials

No.	Part Name	Material	No.	Part Name	Material
1	Body	A216-WCB/A351-CF8	13	Bushing	50%SS+50%PTFE
2	Cap	A216-WCB/A351-CF8	14	Gland	SUS316
3	Ball	A351-CF8	15	Disc shrapnel	SUS301
4	Seat	TFM4215-1	16	Stem nut	A194-8
5	Cover gasket	PTFE	17	Positioning lock cover	SUS304
6	Bolt	A193-B7	18	Handle nut(DN15~DN65)	A194-8
7	Bolt nut	A194-2H	19	Handle(DN15~DN65)	SUS304
8	Stem	SUS304	20	Handle(DN80~DN100)	A53+galvanize
9	Antistatic device	SUS304	21	Handle connector (DN80~DN100)	A351-CF8
10	Thrust washer	PTFE	22	Locking screw(DN80~DN100)	A193-B8
11	O-ring	FKM	23	Positioner(DN80~DN100)	SUS304
12	Stem packing	PTFE	24	Nameplate	SUS304

Product numbering rules

Type code	Body form	Size (DN)	Connection	Nominal pressure	Body materials	Sealing surface
BV	**02**=**2**-piece	**8**	**N**=NPT	**16**=PN16	**S**=**CF8**	**TFM4215-1**
	03=**3**-piece	**10**	**B**=BSPT	**25**=PN25	**WCB**(default)	
		15	**SW**	**40**=PN40		
		20	**FLG**=Flange	**63**=PN63		
		25		**150**=150LB		
		32		**300**=300LB		
		40				
		50				
		65				
		80				
		100				

For example: **BV02-100FLG150**

Note:1. DN8, DN10 connection form only for NPT, BSPT, SW.

2. All 3-piece ball valves are screwed and 2-piece ball valves are flanged.

Fuchen intelligent Equipment (Hangzhou) Co., Ltd.

Tel:0571-82917716 Fax:0571-82917706

E-mail:fuchen@fuchensteam.com www.fuchensteam.com

2-piece manual ball valve



Standard:

Design standard:GB/T12224 GB/T12237
Structure length: GB/T12221
Flange standard: GB/T9113.1
Wall thickness: ASME B16.34

Performance Parameters:

Nominal pressure: PN16/PN25/PN40
Operating temperature: ≤235°C
Body: CF8/WCB
Drive mode: Manual

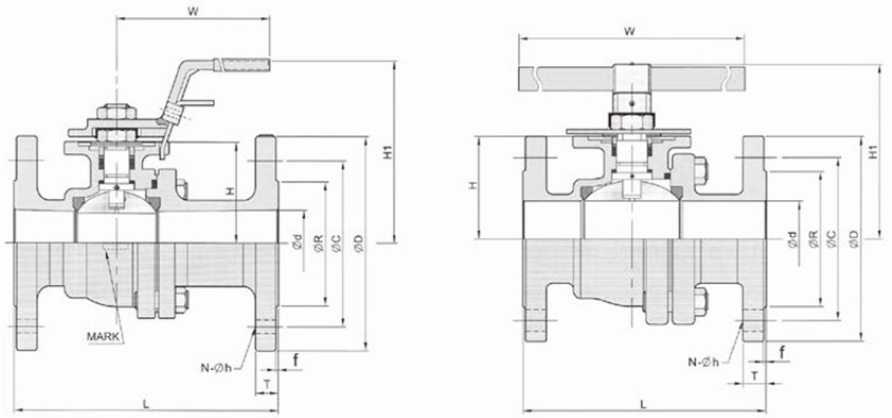

DN15~DN80

DN100~DN200

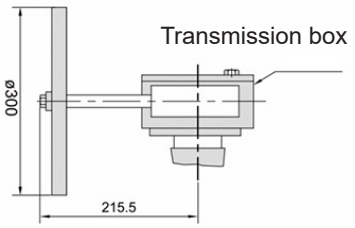

DN200 Handle

PN16/25/40 Size Specification Table

Unit: mm

Size	PN	ød	L	øR	øD	øC	f	T	H	H1	N	øh	W	WT (Kg)
DN15	16/25/40	15	130	46	95	65	2	14	37	84.0	4	14	135	2.3
DN20		20	130	58	105	75	2	16	40	87.5	4	14	135	2.5
DN25		25	140	65	115	85	3	16	46	96.0	4	14	170	3.6
DN32		32	165	76	140	100	3	18	50	100.0	4	18	170	5.1
DN40		38	165	84	150	110	3	18	61	108.0	4	18	200	7.1
DN50		50	203	99	165	125	3	20	71	124.0	4	18	200	10.0
DN65	16	65	222	118	185	145	3	20	88	148.0	8(4)*	18	300	14.9
	25/40							22			8	18		
DN80	16	76	241	132	200	160	3	20	98	160.0	8	18	300	18.6
	25/40							24						
DN100	16	100	305	156	220	180	3	22	120	209.0	8	18	400	27.3
	25/40				235	190		24				22		
DN125	16	125	356	184	250	210	3	22	183	256	8	18	600	46.2
	25/40				270	220		26				26		
DN150	16	150	394	211	285	240	3	24	204	280	8	22	800	74
	25/40				300	250		28				26		
DN200	16	200	457	266	340	295	3	24	253	—	12	22	—	122.9
	25			274	360	310		30				26		
	40			284	375	320		34				30		

Note: * The default is 8-hole flange, 4-hole flange can be specially provided.

Design, materials, weights, and performance specifications are approximate and subject to change without notice. Please contact us for the latest information.

Fuchen intelligent Equipment (Hangzhou) Co., Ltd.
Tel:0571-82917716 Fax:0571-82917706
E-mail:fuchen@fuchensteam.com www.fuchensteam.com

2-piece manual ball valve



Standard:

Design standard: ASME B16.34 API608
Structure length: ASME B16.10
Flange standard: ASME B16.5
Wall thickness: ASME B16.34

Performance Parameters:

Nominal pressure: ASME CLASS 150/300
Operating temperature: ≤235°C
Body: CF8/WCB
Drive mode: Manual

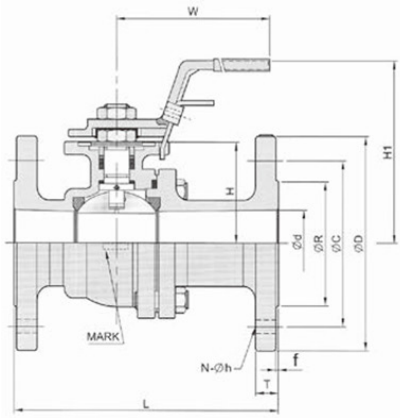

DN15~DN80

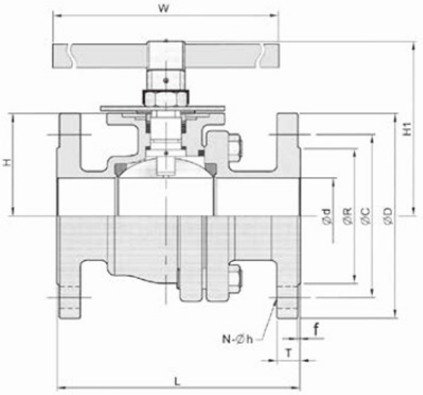

DN100~DN200

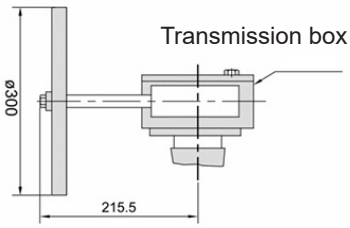

DN200 Handle

ANSI CLASS 150 Size Specification Table

Unit: mm

Size	Ød	L	ØR	ØD	ØC	f	T	H	H1	N	Øh	W	WT (Kg)
DN15	15	108	35.0	89.0	60.5	2	9.7	37.0	86	4	16	135	1.6
DN20	20	117	43.0	98.6	70.0	2	10.5	40.0	90	4	16	135	1.6
DN25	25	127	51.0	108.0	79.2	2	11.2	46.0	99	4	16	170	2.8
DN32	32	140	63.5	117.0	88.9	2	12.7	50.0	102	4	16	170	3.7
DN40	38	165	73.2	127.0	98.6	2	14.2	62.0	118	4	16	200	5.8
DN50	50	178	92.0	152.5	120.7	2	15.9	71.0	127	4	19	200	8.3
DN65	65	190	105.0	177.8	139.7	2	17.5	89.0	146	4	19	300	13.5
DN80	76	203	127.0	190.5	152.4	2	19.1	100.0	155	4	19	300	17.0
DN100	100	229	157.2	229.0	190.5	2	23.9	120.5	209	8	19	400	29.1
DN125	125	356	186.0	254.0	216.0	2	24.0	183.0	255.5	8	22.3	600	48.6
DN150	150	394	216.0	279.4	241.3	2	25.4	204.0	275.5	8	22.3	800	73.1
DN200	200	457	270.0	342.9	298.5	2	28.5	252.5	—	8	22.3	—	124.4

ANSI CLASS 300 Size Specification Table

Unit: mm

Size	Ød	L	ØR	ØD	ØC	f	T	H	H1	N	Øh	W	WT (kg)
DN15	15	140	35.0	95.3	66.5	2	14.3	37.0	86	4	16.0	135	2.4
DN20	20	152	43.0	117.4	82.6	2	15.9	40.5	90	4	19.0	135	3.5
DN25	25	165	51.0	124.0	88.9	2	17.5	46.0	99	4	19.0	170	4.6
DN32	32	178	63.5	133.4	98.6	2	19.1	50.0	102	4	19.0	170	5.7
DN40	38	190	73.2	155.5	114.3	2	20.7	62.0	118	4	22.3	200	8.5
DN50	50	216	92.0	165.0	127.0	2	22.3	70.5	127	8	19.0	200	10.7
DN65	64	241	104.7	190.5	149.4	2	25.5	89.0	146	8	22.3	300	18.0
DN80	76	282	127.0	210.0	168.0	2	28.6	100.0	155	8	22.3	300	25.9
DN100	100	305	157.0	254.0	200.0	2	31.8	120.5	209	8	22.3	400	39.9
DN125	125	381	186.0	279.4	235.0	2	35.4	183.0	256.0	8	22.3	600	69.2
DN150	150	403	216.0	317.5	269.8	2	37.0	204.0	276.0	12	22.3	600	95.9
DN200	200	502	270.0	381.0	330.2	2	41.6	252.5	—	12	25.4	—	145.5

Fuchen intelligent Equipment (Hangzhou) Co., Ltd.
Tel:0571-82917716 Fax:0571-82917706
E-mail:fuchen@fuchensteam.com www.fuchensteam.com

3-piece manual ball valve



Standard:

Design standard: ASME B16.34,API 608
Wall thickness: EN12516-3
Pipe thread interface: B1.20.1, BS21
DIN 2999/259,ISO 228/1
Socket welding interface: ASTM B16.11
Connection: NPT/BSPT/SW
Inspection and testing: GB/T13927

Performance Parameters:

Nominal pressure: PN63
Operating temperature: ≤235°C
Body: CF8/WCB
Drive mode: Manual

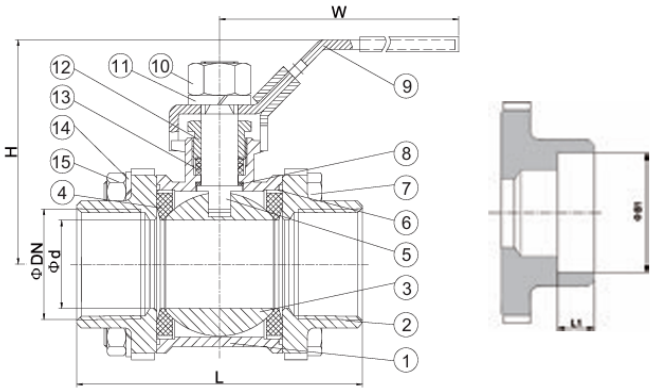

Materials

No.	Part Name	Material
1	Body	A216-WCB/A351-CF8
2	Cap	A216-WCB/A351-CF8
3	Steel Ball	A351-CF8
4	Seat	PTFE/TFM4215-1
5	Stem	SUS304
6	Cover gasket	PTFE/TFM4215-1
7	Hexagon bolt	A193-B8
8	Underfill	PTFE/TFM1600
9	Handle	SUS304
10	Stem nut	A194-8
11	Stem spring washer	SUS304
12	Gland nut	SUS304
13	Stem packing	PTFE/TFM1600
14	Spring washer	SUS304
15	Hexagon nut	A194-8

PN63 Size Specification Table (BSPT/NPT/SW)

Unit: mm

Size	ød	L	H	W	øB1	L1	WT (Kg)
DN8	10.6	65.2	58.0	100	14.2	10	0.4
DN10	12.7	65.2	58.0	100	17.5	10	0.4
DN15	15.0	69.5	58.0	100	21.8	10	0.5
DN20	20.0	80.0	64.0	129	27.3	13	0.8
DN25	25.0	90.0	77.0	156	34.0	13	1.2
DN32	32.0	110	83.0	156	42.8	16	1.9
DN40	38.0	120	96.0	182.5	49.0	16	2.6
DN50	50.0	140	102.0	182.5	61.4	17	4.1

Design, materials, weights, and performance specifications are approximate and subject to change without notice. Please contact us for the latest information.

Fuchen intelligent Equipment (Hangzhou) Co., Ltd.
Tel:0571-82917716 Fax:0571-82917706
E-mail:fuchen@fuchensteam.com www.fuchensteam.com

Strainer



Fuchen intelligent Equipment (Hangzhou) Co., Ltd.
Tel:0571-82917716 Fax:0571-82917706
E-mail:fuchen@fuchensteam.com www.fuchensteam.com

Strainer

Design Features

1. Close contact between the strainer cavity and the screen, preventing leaks and extrusion: Precision-machined ends of the cavity provide an optimally smooth contact surface for the screen and a fixed cavity length. The screen maintains close contact with the precision-machined cavity, effectively preventing impurities larger than the strainer openings from escaping through the ends.
2. Screwed strainer retainer for easy installation and removal: The straight thread construction means that with the proper gasket fit, minimal torque is required for tightening or removal, and the risk of freezing is significantly reduced compared to hardened pipe threads that are difficult to separate.
3. Eccentric drain connection: Large-diameter strainers are equipped with an eccentric drain connection, which allows nearly all liquid and contaminants to be removed during strainer draining and reduces splashing when removing the strainer retainer.

The strainer maintains close contact with the cavity.

The cavity's ends are precision-machined, providing an ideal, smooth contact surface for the strainer and a constant cavity length. The strainer maintains close contact with the precision-machined cavity, effectively preventing impurities larger than the strainer openings from escaping through the strainer's ends.

Mesh Options

30×30 woven screen or .045 punched stainless steel screen. Other screen materials, mesh sizes, and punching sizes are also available.

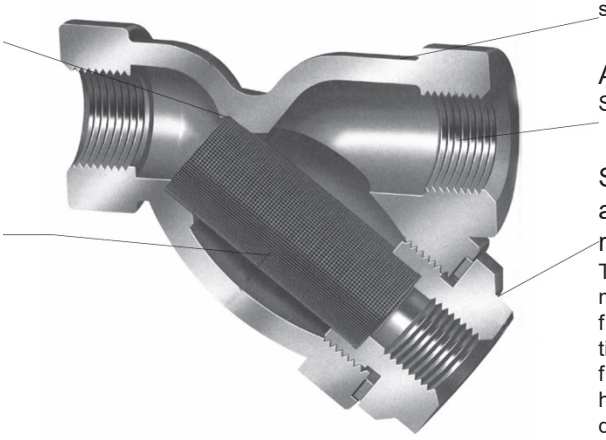

Body Material

Cast iron, carbon steel, chrome-molybdenum steel, forged steel, stainless steel, and bronze.

Available connection types

Screwed, socket weld or flanged.

Screwed strainer retainers are easy to install and remove.

The straight thread construction means that with the proper gasket fit, less torque is required for tightening or removal. The risk of freezing is much less than with hardened pipe threads, which are difficult to separate.

Illustration	Model	Nominal Diameter	Connection type	Body material	Pressure temperature ratings	
					steam Non-shock	Cold Non-shock
	CA	DN15,DN20,DN25 DN32,DN40,DN50	Screwed	Gray cast iron ASTM A48 30	1.7MPa@208˚C	2.8MPa@66˚C
	G	DN15,DN20,DN25 DN32,DN40,DN50	Integral flange PN16	Ductile iron ASTM A395 60-40-18	1.44MPa@200˚C	1.6MPa@66˚C
			Integral flange PN25		2.2MPa@215˚C	2.5MPa@66˚C
		DN65,DN80,DN100 DN125,DN1150. DN200	Integral flange PN16		1.44MPa@200˚C	1.6MPa@66˚C
			Integral flange PN25		2.2MPa@215˚C	2.5MPa@66˚C
			Integral flange CL.300		3.5MPa@243˚C	4.0MPa@66˚C
	CB	DN15,DN20,DN25 DN32,DN40,DN50	Screwed Configuration flange PN40 Configuration flange CL.300	Cast steel ASTM A216 Gr.WCB	2.45MPa@400˚C	4.0MPa@38˚C
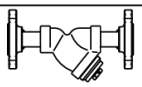		DN65,DN80,DN100	Integral flange PN40 Integral flange CL.300		2.2MPa@400˚C	
		DN125,DN1150. DN200	Integral flange PN25 Integral flange CL.150		1.38MPa@400˚C	2.5MPa@38˚C
	CE	DN15,DN20,DN25 DN32,DN40,DN50	Screwed Configuration flange PN40 Configuration flange CL.300	Cast 304 stainless steel ASTM A351 Gr.CF8	3.14MPa@400˚C	4.0MPa@38˚C
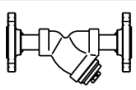						
		DN65,DN80,DN100	Integral flange PN40 Integral flange CL.300		2.22MPa@400˚C	3.75MPa@38˚C
		DN125,DN1150. DN200	Integral flange PN25 Integral flange CL.150		1.39MPa@400˚C	2.34MPa@38˚C

Design, materials, weights, and performance specifications are approximate and subject to change without notice. Please contact us for the latest information.

Fuchen intelligent Equipment (Hangzhou) Co., Ltd.
Tel:0571-82917716 Fax:0571-82917706
E-mail:fuchen@fuchensteam.com www.fuchensteam.com

CA Series Y-Type Strainer

Cast iron strainer

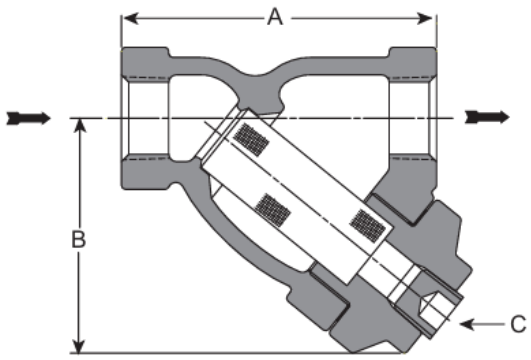

Screwed(DN15,20,25,40,50)

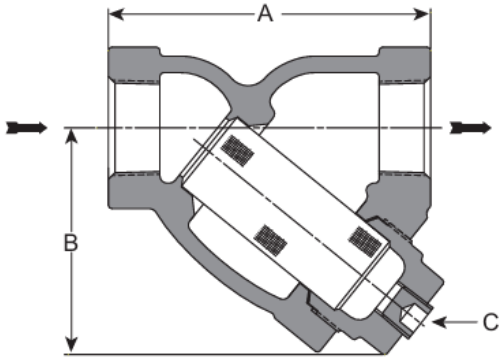

Screwed(DN32)

Size

	Size			Weight
	A	B	C	
DN	mm	mm	inch	kg
15	90	68	3/8	1.1
20	108	76	1/2	1.4
25	127	95		2
32	140	98		3
40	160	117		4.5
50	191	138		6.8

Pressure/temperature parameters

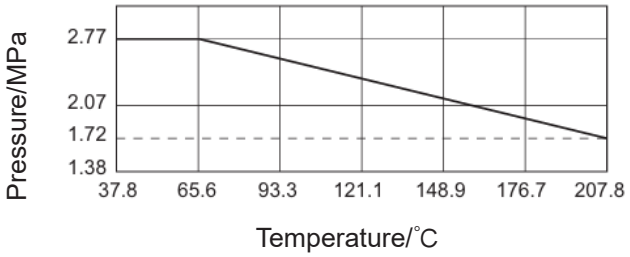

Material

Nominal diameter DN	Body	Screen retainer	Gasket	Standard screen
15,20,25,40,50	ASTM A48 30 Gray cast iron		Spiral winding	30×30 mesh 304 stainless steel Woven mesh Other filter materials, mesh sizes, and perforations are also available
32			Mild steel	

Parameter

Nominal Diameter	Model (Standard screen)	Maximum pressure		Screen retainer type	Connection type
		400˚C	66˚C non-shock		
DN		MPa	MPa		
15,20,25 32,40,50	CA41SC	1.7	2.8	Threaded	ANSI B1.20.1 NPT BS 21 BSPT

Fuchen intelligent Equipment (Hangzhou) Co., Ltd.
Tel:0571-82917716 Fax:0571-82917706
E-mail:fuchen@fuchensteam.com www.fuchensteam.com

G Series Y-Type Strainer

Ductile iron strainer

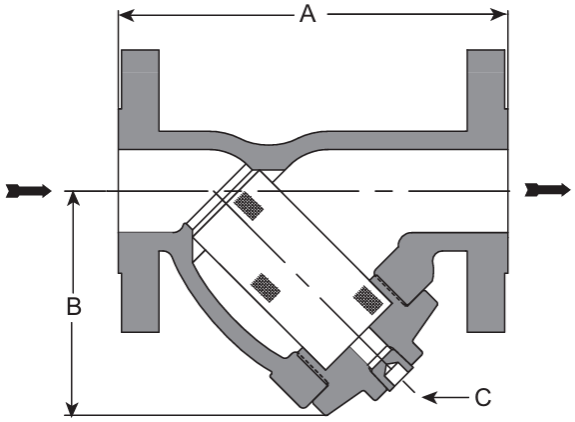

Integral flange(DN15-50)

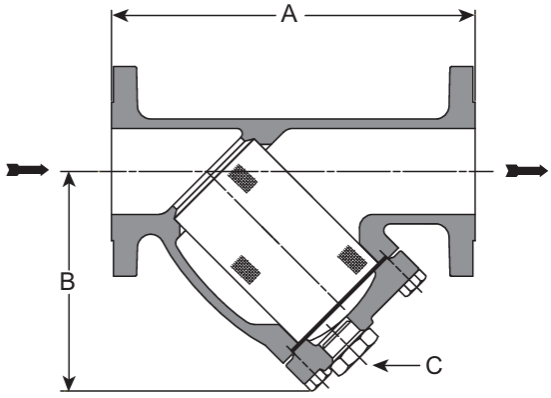

Integral flange (DN65-200)

Note: C is the size of the drain plug. The drain plug is standard configuration. If you need a product without drain, please indicate it before ordering.

Size

	Size			Weight		
	A	B	C	G41FL16	G41FL25	G41FL300
DN	mm	mm	inch	kg	kg	kg
15	130	70	3/8	3	3	-
20	150	85	1/2	3.5	3.5	-
25	160	95		4.5	4.5	-
32	180	105		7	7	-
40	200	120		9	9	-
50	230	140		13	13	-
65	287	166	1	14	14	19
80	348	210	1-1/4	22	22	30
100	420	275		38	38	52
125	531	344		71	71	91
150	577	388	1-1/2	93	93	114
200	673	500	2	169	169	213

Pressure/temperature parameters

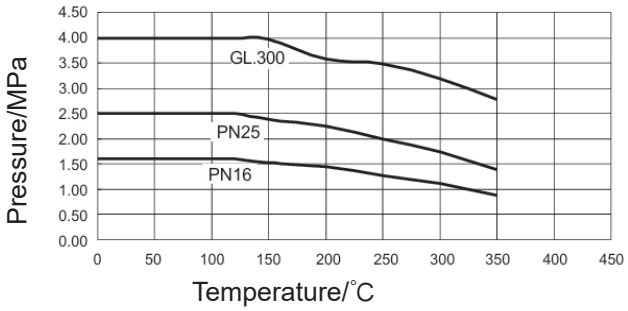

Material

Nominal diameter DN	Body	Screen retainer	Gasket	Standard screen	Bolt
15,20,25 32,40,50	Ductile iron ASTM A395 60-40-18		Spiral winding	30×30 mesh 304 stainless steel Woven mesh Other filter materials, mesh sizes, and perforations are also available	-
65,80,100 125,150,200					ASTM A193 Gr.B7

Parameter

Nominal Diameter DN	Model (Standard screen)	Maximum pressure 400˚C MPa	Maximum pressure 66˚C non-shock MPa	Screen retainer type	Connection type
15, 20, 25 32, 40, 50	G41FL16	1. 44	1. 6	Threaded	Integral flange HG20592 PN16RF
	G41FL25	2. 2	2. 5		Integral flange HG20592 PN25RF
65, 80, 100 125, 150, 200	G41FL16	1. 44	1. 6	Bolt	Integral flange HG20592 PN16RF
	G41FL25	2. 2	2. 5		Integral flange HG20592 PN25RF
	G41FL300	3. 5	4. 0		Integral flange ASME B16. 1 CL. 300RF

Design, materials, weights, and performance specifications are approximate and subject to change without notice. Please contact us for the latest information.

Fuchen intelligent Equipment (Hangzhou) Co., Ltd.
Tel:0571-82917716 Fax:0571-82917706
E-mail:fuchen@fuchensteam.com www.fuchensteam.com

CB Series Y-Type Strainer

Cast steel strainer

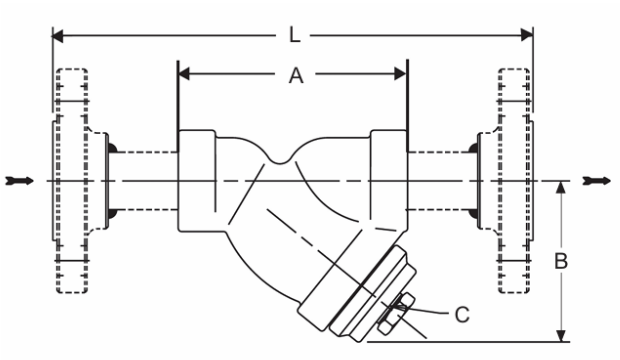

Screwed/Configuration flange(DN15-50)

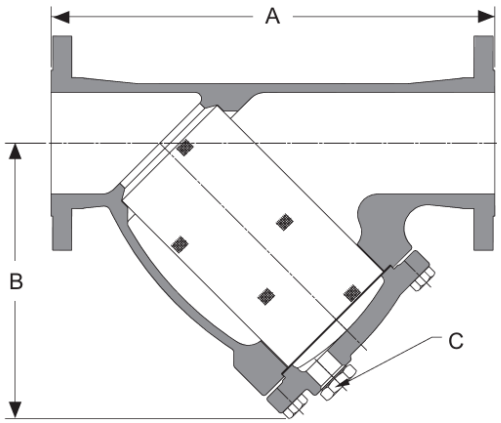

Integral flange(DN65-200)

Size

	Size				Weight	
	A	B	L	C	Threaded	Flanged
DN	mm	mm	mm	inch	kg	kg
15	95	68	184	3/8	1	3.2
20	106	75	197		1.2	3.7
25	127	89	226		2.1	4.7
32	140	100	244	1/2	4.5	7.3
40	160	115	273		6.5	9.5
50	197	135	308		7.8	15
65	315	182		1		18
80	400	217				27
100	450	275	-	1-1/4	-	40
125	560	347				70
150	600	384		1-1/2		90
200	750	509		2		170

Pressure/temperature parameters

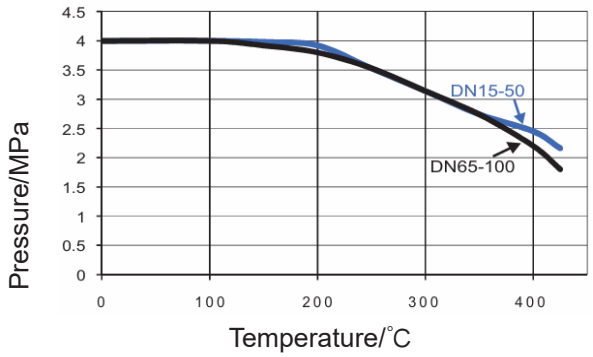

DN15-100

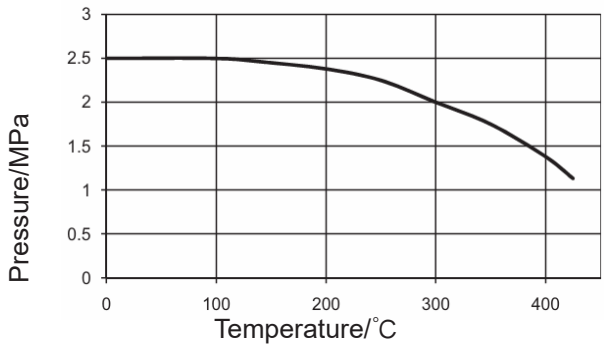

DN125-200

Fuchen intelligent Equipment (Hangzhou) Co., Ltd.
Tel:0571-82917716 Fax:0571-82917706
E-mail:fuchen@fuchensteam.com www.fuchensteam.com

CB Series Y-Type Strainer

Cast steel strainer

Material

Nominal diameter DN	Body	Screen retainer	Gasket	Standard screen	Bolt
15,20,25 32,40,50	Cast steel ASTM A216 Gr. WCB		Spiral winding	30×30 mesh 304 stainless steel Woven mesh Other filter materials, mesh sizes, and perforations are also available	-
65,80,100					ASTM A193 Gr.B7
125,150,200					

Parameter

Nominal Diameter DN	Model (Standard screen)	Maximum pressure 400℃ MPa	Maximum pressure 38℃ non-shock MPa	Screen retainer type	Connection type
15,20,25 32,40,50	CB41SC	2.45	4.0	Threaded	ANSI B1.20.1 NPT BS 21 BSPT
	CB41FL40				Configuration flange HG20592 PN40RF
	CB41FL300				Configuration flange ASME B16.5 CL.300RF
65,80,100	CB41FL40	2.2	4.0	Bolt	Integral flange HG20592 PN40RF
	CB41FL300				Integral flange ASME B16.5 CL.300RF
125,150,200	CB41FL25	1.38	2.5		Integral flange HG20592 PN25RF
	CB41FL150	0.65	1.96		Integral flange ASME B16.5 CL.150RF

Design, materials, weights, and performance specifications are approximate and subject to change without notice. Please contact us for the latest information.

Fuchen intelligent Equipment (Hangzhou) Co., Ltd.
Tel:0571-82917716 Fax:0571-82917706
E-mail:fuchen@fuchensteam.com www.fuchensteam.com

CE Series Y-Type Strainer

Stainless steel strainer

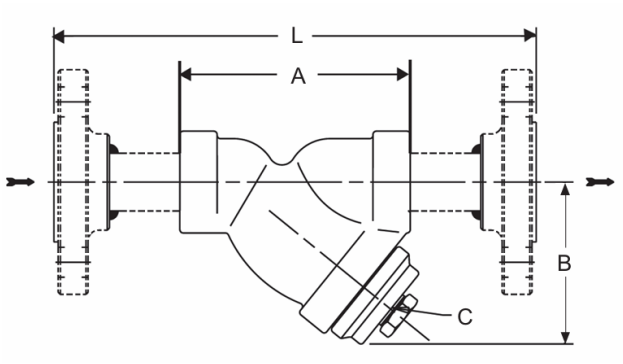

Screwed (DN15-50)

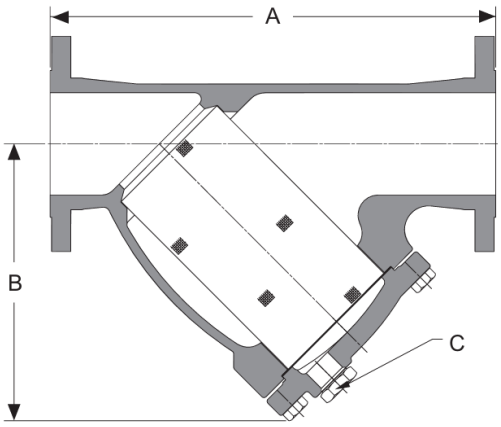

Flanged(DN65-200)

Size

	Size				Weight	
	A	B	L	C	Screwed	Flanged
DN	mm	mm	mm	inch	kg	kg
15	95	68	184	3/8	1	3.2
20	106	75	197		1.2	3.7
25	127	89	226		2.1	4.7
32	140	100	244	1/2	4.5	7.3
40	160	115	273		6.5	9.5
50	197	135	308		7.8	15
65	315	182		1		18
80	400	217				27
100	450	275	-	1-1/4	-	40
125	560	347				70
150	600	384		1-1/2		90
200	750	509		2		170

Pressure/temperature parameters

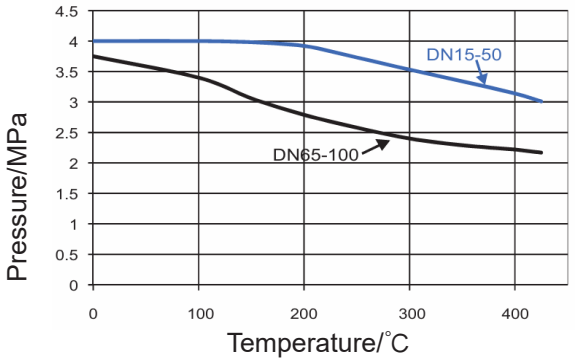

DN15-100

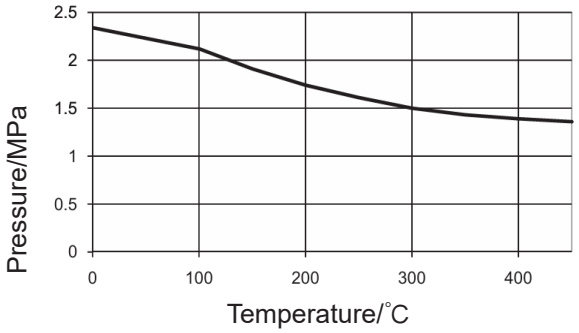

DN125-200

Fuchen intelligent Equipment (Hangzhou) Co., Ltd.
Tel:0571-82917716 Fax:0571-82917706
E-mail:fuchen@fuchensteam.com www.fuchensteam.com

CE Series Y-Type Strainer

Stainless steel strainer

Material

Nominal diameter DN	Body	Screen retainer	Gasket	Standard screen	Bolt
15,20,25 32,40,50	Cast 304 stainless steel ASTM A351 Gr.CF8		Spiral winding	30×30 mesh 304 stainless steel Woven mesh Other filter materials, mesh sizes, and perforations are also available	-
15,20,25 32,40,50 65,80,100					ASTM A193 Gr.B7
125,150,200					

Parameter

Nominal Diameter DN	Model (Standard screen)	Maximum pressure 400˚C MPa	Maximum pressure 38˚C non-shock MPa	Screen retainer type	Connection type
15,20,25 32,40,50	CE41SC	3.14	4.0	Threaded	ANSI B1.20.1 NPT BS 21 BSPT
	CE41FL40				Configuration flange HG20592 PN40RF
	CE41FL300				Configuration flange ASME B16.5 CL.300RF
65,80,100	CE41FL40	2.22	3.75	Bolt	Integral flange HG20592 PN40RF
	CE41FL300				Integral flange ASME B16.5 CL.300RF
125,150,200	CE41FL25	1.39	2.34		Integral flange HG20592 PN25RF
	CE41FL150	0.65	1.9		Integral flange ASME B16.5 CL.150RF

Design, materials, weights, and performance specifications are approximate and subject to change without notice. Please contact us for the latest information.

Fuchen intelligent Equipment (Hangzhou) Co., Ltd.
Tel:0571-82917716 Fax:0571-82917706
E-mail:fuchen@fuchensteam.com www.fuchensteam.com

Separator

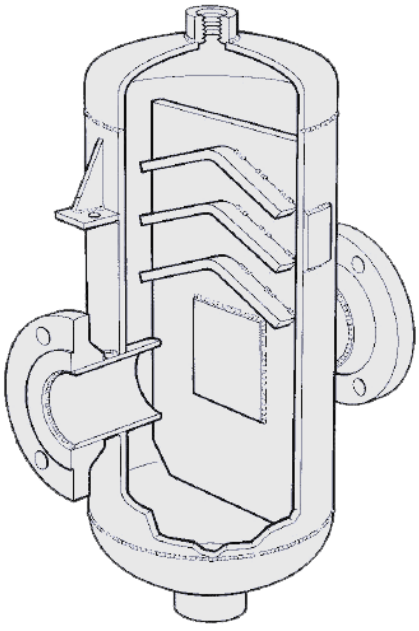

Fuchen intelligent Equipment (Hangzhou) Co., Ltd.
Tel:0571-82917716 Fax:0571-82917706
E-mail:fuchen@fuchensteam.com www.fuchensteam.com

Separator



Product Description

The S-series steam-water separators utilize a baffle design and can be used to separate liquid media from steam, compressed air, and other gases.

Working conditions

Model	Max. Pressure(MPa)	Max. Temp.(˚C)	Connection
SD	2.5	300	Thread, Flanged
SD-H	2.5	300	Flanged
SCS	2.5	350	Flanged
SSS	2.5	500	Flanged

Specifications

Model	Material	Nominal pressure (MPa)	Nominal Diameter	Connection
SD	Ductile iron ASTM A395 60-40-18	2.5	DN20,DN25,DN32,DN40, DN50	BSPT/ NPT HG20592 PN25 RF ASME 300LB RF
SD-H	Ductile iron ASTM A395 60-40-18	2.5	DN65,DN80,DN100,DN125, DN150,DN200	HG20592 PN25 RF
SCS	Carbon steel Q345R	2.5	DN65,DN80,DN100,DN125, DN150,DN200	HG20592 PN40 RF ASME 300LB RF
SSS	Stainless steel OCR18Ni9	2.5	DN65,DN80,DN100,DN125,D N150,DN200	HG20592 PN40 RF ASME 300LB RF

Note: Flanges are available in both national and American standards. If you have other requirements, please contact the manufacturer.

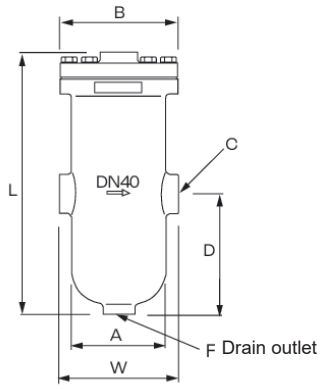

SD

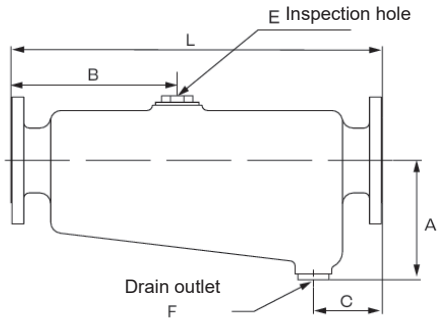

SD-H

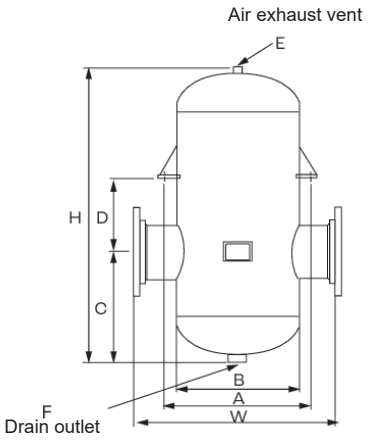

SCS/SSS

Design, materials, weights, and performance specifications are approximate and subject to change without notice. Please contact us for the latest information.

Fuchen intelligent Equipment (Hangzhou) Co., Ltd.
Tel:0571-82917716 Fax:0571-82917706
E-mail:fuchen@fuchensteam.com www.fuchensteam.com

Size(mm)

SD								
DN	L	W	A	B	C*	D	F*NPT	Weight(kg)
DN20	354	120	91	141	3/4"	170	3/4"	9.4
DN25	354	120	91	141	1"	170	3/4"	9.4
DN32	354	120	91	141	1-1/4"	170	3/4"	9.1
DN40	500	228	174	241	1-1/2"	230	1"	42.2
DN50	523	253	198	265	2"	245	1"	49.4

Note: "*" means BSPT is available

SD-H							
DN	L	A	B	C	E	F BSPT	Weight(kg)
DN65	405	186	171	108	M56	3/4"	32
DN80	480	175	217	116	M72	1"	38
DN100	690	218	309	128	M72	1"	85
DN125	700	233	325	130	M72	1"	122
DN150	700	233	325	130	M72	1"	150
DN150	700	313	283	165	M72	1-1/2"	192

SCS/SSS									
DN	H	W	A	B	C	D	E BSPT	F BSPT	weight (kg)
DN65	650	420	332	220	250	150	3/4"	1"	45
DN80	750	500	372	260	280	180	3/4"	2"	65
DN100	800	560	432	320	300	200	3/4"	2"	85
DN125	850	660	472	360	320	220	3/4"	2"	100
DN150	950	700	512	400	360	240	3/4"	2"	130
DN200	1200	860	612	500	450	300	3/4"	2"	230

Material

No.	Part name	SD	SD-H	SCS	SSS
		Ductile iron	Ductile iron	Carbon steel	Stainless steel
1	Body	A395	A395	Q345R	0CR18Ni9
2	Cover	A395	-	-	-
3	Gasket	Flexible graphite	-	-	-
4	Bolt	35CrM0	-	-	-
5	Screw plug	-	Carbon steel	-	-
6	Drain reducer	-	Carbon steel	-	-

Fuchen intelligent Equipment (Hangzhou) Co., Ltd.
Tel:0571-82917716 Fax:0571-82917706
E-mail:fuchen@fuchensteam.com www.fuchensteam.com

Check Valve



Design, materials, weights, and performance specifications are approximate and subject to change without notice. Please contact us for the latest information.

Fuchen intelligent Equipment (Hangzhou) Co., Ltd.
Tel:0571-82917716 Fax:0571-82917706
E-mail:fuchen@fuchensteam.com www.fuchensteam.com

Wafer Check Valve



Product Description

Check valves, also known as one-way or non-return valves, effectively prevent backflow of media in pipelines. They are primarily used in pipelines with unidirectional flow, allowing the media to flow in only one direction to prevent accidents.

Wafer-type lift check valves are automatic valves that open based on the pressure of the media. When the media stops flowing, the spring forces the valve to close before reverse flow occurs.

Installation Precautions

Check valves should be installed according to the flow direction arrow on the valve body.

Material

Body: Cast steel/Stainless steel
Disc: Cast steel/Stainless steel
Spring: Stainless steel
Clamping ring: Stainless steel

Valve body nominal pressure and maximum operating temperature

Valve body design pressure: PN10-PN40
TMO: ≤200°C

Specifications and Connections

DN15-DN150 Flange connection PN10-PN40

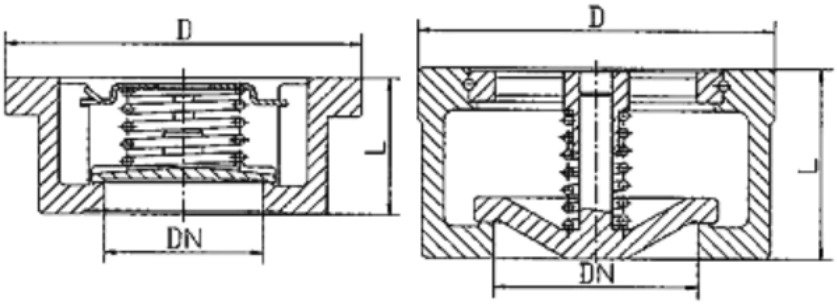

Nominal diameter	L mm	D(mm)	Weight(kg)	D(mm)	Weight(kg)	D(mm)	Weight(kg)	D(mm)	Weight(kg)
		PN10		PN16		PN25		PN40	
DN15	16	53	0.3	53	0.3	53	0.3	53	0.3
DN20	19	63	0.5	63	0.5	63	0.5	63	0.5
DN25	22	73	0.7	73	0.7	73	0.8	73	0.8
DN32	28	84	1.1	84	1.1	84	1.3	84	1.3
DN40	32	94	1.14	94	1.5	94	1.6	94	1.8
DN50	40	109	2.1	109	2.2	109	2.3	109	2.6
DN65	46	129	2.9	129	3.2	129	3.3	129	3.6
DN80	50	144	3.7	144	4.0	144	4.4	144	4.8
DN100	60	164	4.8	164	5.2	170	5.6	170	5.9
DN125	90	194	7.8	194	8.6	198	9.2	198	10
DN150	106	220	10.6	220	11.6	228	12.5	228	13.5

Fuchen intelligent Equipment (Hangzhou) Co., Ltd.
Tel:0571-82917716 Fax:0571-82917706
E-mail:fuchen@fuchensteam.com www.fuchensteam.com

Air Vent



Design, materials, weights, and performance specifications are approximate and subject to change without notice. Please contact us for the latest information.

Fuchen intelligent Equipment (Hangzhou) Co., Ltd.
Tel:0571-82917716 Fax:0571-82917706
E-mail:fuchen@fuchensteam.com www.fuchensteam.com

AV813 Air Vent



Product Description

The AV813 air eliminator is used to remove air and other non-condensable gases from containers or piping systems while preventing the escape of liquid. The air eliminator features cast iron construction, stainless steel internals, and an EPDM soft seat for tight closure. Fluororubber seats are available for higher temperatures for even tighter closure.

Operating Principle

The valve and seat assembly in the air eliminator are connected to a stainless steel float. When the eliminator is empty, the float is in its lowest position, allowing air and other gases to escape from the container or pipe. When liquid enters the eliminator, the float rises, keeping the valve closed until the liquid escapes.

Installation Notes

The AV813 should be installed high in the container or system, horizontally or vertically, to ensure upward flow and proper operation of the float mechanism. An isolation valve should also be installed for ease of maintenance.

Material

Bonnet: Cast iron ASTM A-126
Body: Cast iron ASTM A-126
Gasket: Oil-resistant graphite
Seat carrier: 304 stainless steel
Seat: 304 stainless steel
Pin: 304 stainless steel
Seal: EPDM/Viton
Connecting rod: 304 stainless steel
Float: 304 stainless steel
Gasket: 304 stainless steel
Screws and washers: 304 stainless steel

Maximum operating pressure and temperature

PMO: 10.3 bar
TMO: 149°C

Specifications and connections

3/4" NPT/BSP screwed connection

Size(mm)

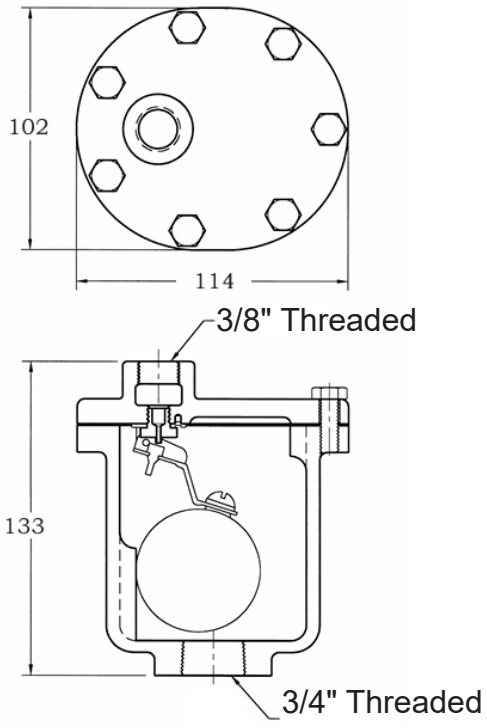

Air displacement (m³/h)										
Pressure bar	1	2	3	4	5	6	7	8	9	10
	1.80	3.04	4.13	5.13	6.10	7.19	8.26	9.24	10.24	11.32

Design, materials, weights, and performance specifications are approximate and subject to change without notice. Please contact us for the latest information.

Fuchen intelligent Equipment (Hangzhou) Co., Ltd.
Tel:0571-82917716 Fax:0571-82917706
E-mail:fuchen@fuchensteam.com www.fuchensteam.com

Thermostatic Air Vent



Material
Valve Housing: ASTM A351-CF3 Stainless Steel
Thermostatic Components: Stainless Steel
Valve Disc: Hardened 40Rc Stainless Steel
Filter Screen: Stainless Steel

Maximum Operating Pressure and Temperature
PMO: 45 bar
TMO: Saturated Steam Temperature

Specifications and Connections
1/2", 3/4" NPT screwed connections

Product Description
The AV2000 exhaust valve can be used to remove air and non-condensable gases from industrial equipment, vessels, and pipelines in industrial steam systems up to 45 bar. This series of exhaust valves features a thermal element-operated, stainless steel construction with a welded, tamper-resistant seat. It features all-stainless steel internals, an integrated filter, and a hardened seat system.

Operating Principle
This thermostatic exhaust valve contains a thermostatic element that expands and contracts with heat. When air and non-condensable gases enter, the exhaust valve is in the discharge position. When steam enters, the thermostatic element expands, tightly closing the valve.

Installation Notes
This exhaust valve should be installed high above the vessel and system. To facilitate removal during system operation, an isolation valve must be installed. The exhaust valve is welded and cannot be repaired.

Size(mm)

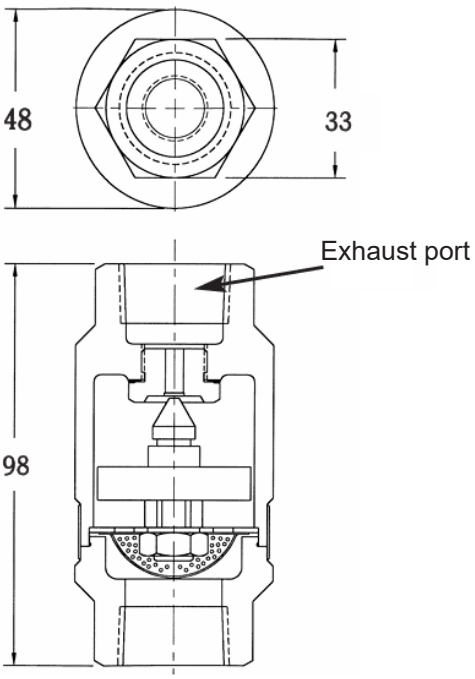

Air displacement (m³/h)

			Inlet pressure(bar)																	
Model	Orifice	PMO (bar)	0.14	0.34	0.69	1.7	3.4	6.9	8.6	10	14	17	21	24	28	31	34	38	42	45
AV 2003	5/16"	45	18.18	21.42	26.82	43.14	70.32	124.56	151.92	178.44	232.8	287.16	341.52	395.94	450.3	504.66	559.02	613.44	667.8	722.16

Design, materials, weights, and performance specifications are approximate and subject to change without notice. Please contact us for the latest information.

Fuchen intelligent Equipment (Hangzhou) Co., Ltd.
Tel:0571-82917716 Fax:0571-82917706
E-mail:fuchen@fuchensteam.com www.fuchensteam.com

Vacuum Breaker



Fuchen intelligent Equipment (Hangzhou) Co., Ltd.
Tel:0571-82917716 Fax:0571-82917706
E-mail:fuchen@fuchensteam.com www.fuchensteam.com

Stainless Steel Vacuum Breaker



Material
Valve Body: Stainless Steel
Valve Disc: Stainless Steel
Nameplate: Stainless Steel

Maximum Working Pressure and Temperature
Maximum Operating Pressure (PMO): 20.7 bar
Maximum Operating Temperature (TMO): 400°C

Specifications and Connections
1/2" BSP screwed connection

Product Description
The WVBSS vacuum breaker can be used in heat exchangers, coils, jacketed vessels, pressure vessels, boiler feedwater tanks, spray systems, water supply lines, and other applications where vacuum conditions may occur. The WVBSS breaks the vacuum by introducing air into the steam or liquid system, preventing damage caused by steam condensation or liquid drainage. Breaking the vacuum effectively protects the system, which is crucial for liquid drainage in process systems.

Operating Principle
The vacuum breaker functions similarly to a standard check valve, allowing external air to enter the system through the air inlet. When steam or water attempts to escape, the vacuum breaker closes tightly.

Installation Notes
The vacuum breaker should be installed vertically at the highest point of the system.

Air displacement (m³/h)						
	Vacuum level(kpa)					
Caliber	6.8	13.5	20.3	27.1	33.9	40.6
1/2"	4.08	5.78	6.80	7.31	7.99	8.33

Size(mm)

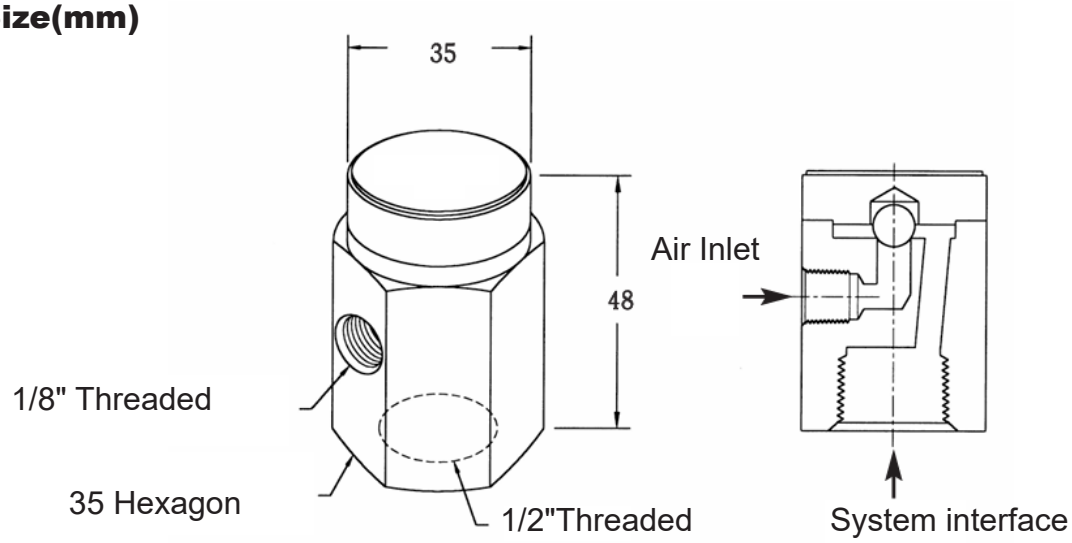

Design, materials, weights, and performance specifications are approximate and subject to change without notice. Please contact us for the latest information.
Fuchen intelligent Equipment (Hangzhou) Co., Ltd.
Tel:0571-82917716 Fax:0571-82917706
E-mail:fuchen@fuchensteam.com www.fuchensteam.com

Flash Tank



Fuchen intelligent Equipment (Hangzhou) Co., Ltd.
Tel:0571-82917716 Fax:0571-82917706
E-mail:fuchen@fuchensteam.com www.fuchensteam.com

Flash Tank



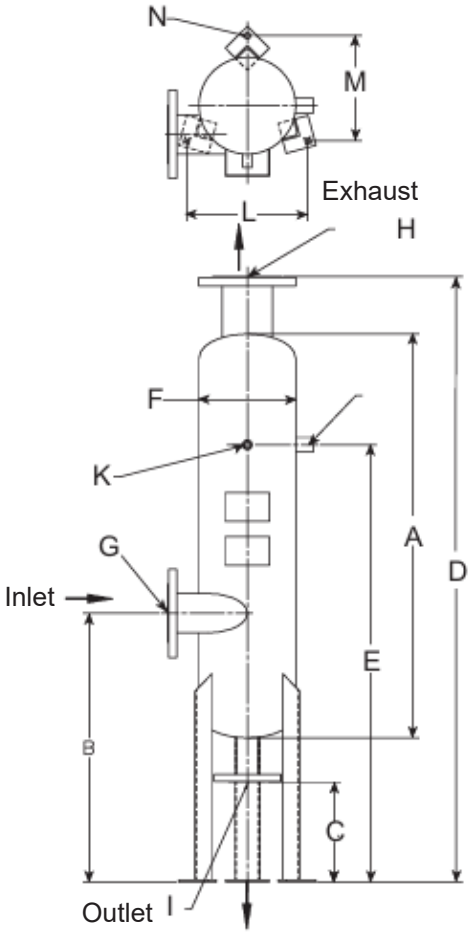

Product Description

· Complies with GB150-1998 standard
· Standard operating pressure is 1.35MPa; other pressure ratings available upon request
· Standard design temperature range: -18°C to 210°C
· Standard product suitable for various operating conditions and loads
· Flash steam recovery tank provides low-velocity flash steam with no entrained water
· Custom-designed tanks available upon request; please contact the manufacturer for details

Size(mm)

Model	AFT-6C	AFT-8C	AFT-12C	AFT-16C
A	914	914	1016	1219
B	608	608	707	790
C	226	226	274	281
D	1370	1370	1530	1740
E	989	989	1139	1349
F	159	219	312	412
G	DN50	DN80	DN100	DN150
H	DN65	DN100	DN150	DN150
I	DN40	DN40	DN50	DN50
J	3/4	1	1-1/2	2
K	1/2	1/2	1/2	1/2
L	220	275	495	590
M	190	255	430	510
N	Φ14	Φ14	Φ20	Φ20

Note: The "G", "H", and "I" ports use HG/T20592 PN16RF flange connections, while the "J" and "K" ports use BSPT screwed connections. All flash evaporators supplied comply with GB150-1998 standards; custom sizes are available upon request.

Displacement

Model	Maximum condensate load	Maximum load for flash steam
	kg/hr	kg/hr
AFT-6C	907	227
AFT-8C	2268	454
AFT-12C	4536	907
AFT-16C	9072	1361

Design, materials, weights, and performance specifications are approximate and subject to change without notice. Please contact us for the latest information.

Fuchen intelligent Equipment (Hangzhou) Co., Ltd.
Tel:0571-82917716 Fax:0571-82917706
E-mail:fuchen@fuchensteam.com www.fuchensteam.com

Sight Glass



Fuchen intelligent Equipment (Hangzhou) Co., Ltd.
Tel:0571-82917716 Fax:0571-82917706
E-mail:fuchen@fuchensteam.com www.fuchensteam.com

Sight Glass



Product Description

A pressure pipe inspection window, as a fluid pipeline observation and monitoring device, is widely used in pipeline systems in industries such as petroleum, chemical, pharmaceutical, and food processing. Installed in the fluid pipeline, the inspection window allows for direct visual observation of the fluid flow. By observing whether there is flow, the direction of flow, and the flow rate, users can determine if control valves, filters, steam traps, and other pipeline equipment are operating normally, thus aiding in system performance analysis and troubleshooting.

· The tempered glass used in the inspection window complies with the manufacturing and acceptance standards of HG/T 21620.

· Double-sided glass window with high transparency for easy viewing.

· Quick and easy inspection, no special training required.

· No moving parts, no maintenance required.

Operating Conditions

Maximum allowable pressure: 2.5 MPa @ 100°C
Maximum working pressure: 2.5 MPa @ 100°C
Maximum allowable temperature: 270°C @ 2.0 MPa
Maximum working temperature: 250°C @ 2.0 MPa
Minimum allowable temperature: -10°C
Minimum working temperature: 0°C

Connection Method

DN15-50: Integral flange, Flange standard: HG20592 PN25/ ASME B16.5 CL.150;
DN65-150: Welded flange, Flange standard: HG20592 PN25/ ASME B16.5 CL300; Other flange specifications are available upon request.

Installation and Maintenance

Shut-off valves should be installed before and after the sight glass for easy maintenance. This sight glass can be installed horizontally or vertically.

Warning

Some fluids contain corrosive alkaline or acidic substances that may damage the sight glass window. Therefore, it is recommended to inspect the window regularly.

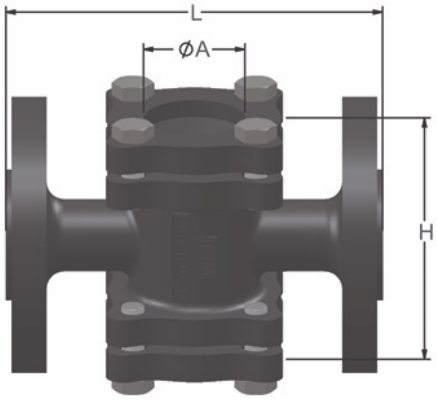

Part \ Model	SG	
	DN15-50	DN65-150
Body	ASTM A216 Gr. WCB	20#
Pressure flange	ASTM A216 Gr. WCB	20#
Lens	Tempered borosilicate glass	
Gasket	Graphite wrapping	

Size(mm)

Nominal diameter	H	L	A
DN15	90	130	35
DN20	90	150	35
DN25	125	160	40
DN32	130	180	60
DN40	130	200	60
DN50	160	230	70
DN65	190	290	90
DN80	225	310	100
DN100	290	350	110
DN125	310	400	150
DN150	350	480	160

Design, materials, weights, and performance specifications are approximate and subject to change without notice. Please contact us for the latest information.

Fuchen intelligent Equipment (Hangzhou) Co., Ltd.
Tel:0571-82917716 Fax:0571-82917706
E-mail:fuchen@fuchensteam.com www.fuchensteam.com

Pressure Gauge

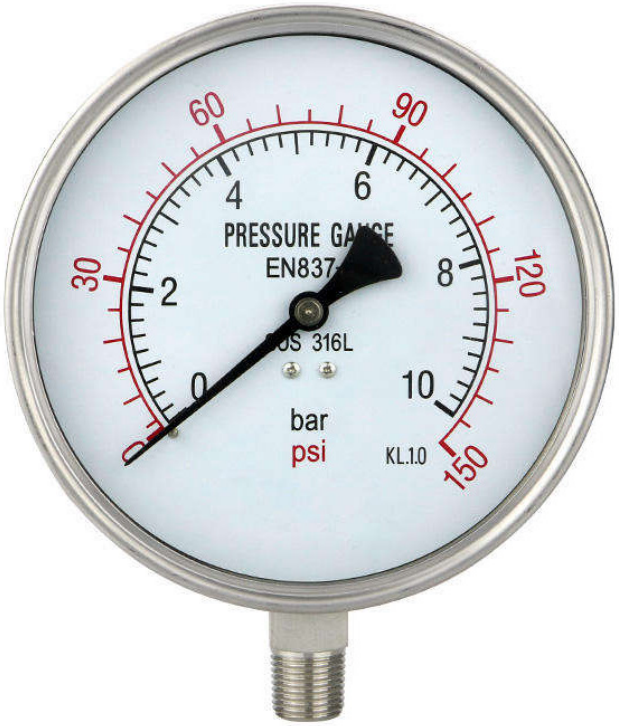

Design, materials, weights, and performance specifications are approximate and subject to change without notice. Please contact us for the latest information.

Fuchen intelligent Equipment (Hangzhou) Co., Ltd.
Tel:0571-82917716 Fax:0571-82917706
E-mail:fuchen@fuchensteam.com www.fuchensteam.com

Stainless Steel Pressure Gauge



Product Description

All parts of the stainless steel pressure gauge are made of stainless steel, of which the main parts are made of OCr17Ni12Mo2 (316) material. It is suitable for detecting the pressure of highly corrosive media in corrosive gas environments. It is widely used in industrial sectors such as petroleum, chemical industry, chemical fiber, metallurgy, power stations, etc.

The instrument consists of a pressure guide system (including joints, spring tubes, throttles, etc.), a gear transmission mechanism, a digital device (pointer and dial) and a casing (including case, cover, glass, etc.). The casing is an airtight structure that can effectively protect the internal components from environmental influences and dirt intrusion.

Model marking

BF: Corrosion-resistant stainless steel
Nominal size: 60, 100, 150mm
N: Shock-resistant type
Y: Pressure gauge

Part name	Material
Connector	OCr17Ni12Mo(316)
Spring tube	OCr17Ni12Mo(316)
Watch case, case back, bezel	1Cr18Ni9

Model	Y-60F	YN-60BF	Y-100BF	YN-100BF	Y-150BF	YN-150BF
Accuracy level	2.5		1.5			
Measurement range MPa	0~0.25 - 60		0~0.1 - 60			
	-0.1~0.15 - 2.4		-0.1~0.06 - 2.4			
Connector thread	M14×1.5.Z1/4"(NPT).G1/4"		M20×1.5.G1/2"(NPT).G3/8"			
Ambient temperature	-40 ～ 70℃		-25 ～ 70℃			
Ambient vibration frequency	not greater than 25Hz					
Amplitude	not greater than 1mm					

Design, materials, weights, and performance specifications are approximate and subject to change without notice. Please contact us for the latest information.

Fuchen intelligent Equipment (Hangzhou) Co., Ltd.
Tel:0571-82917716 Fax:0571-82917706
E-mail:fuchen@fuchensteam.com www.fuchensteam.com

Engineering Data and Drawings

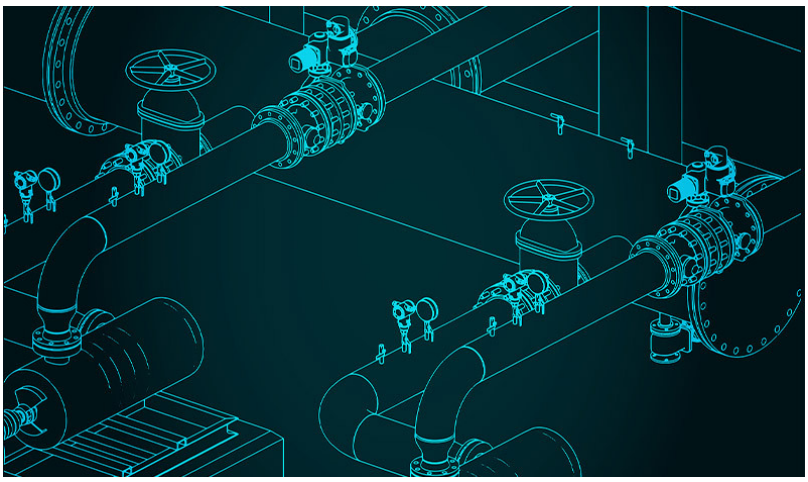

Fuchen intelligent Equipment (Hangzhou) Co., Ltd.
Tel:0571-82917716 Fax:0571-82917706
E-mail:fuchen@fuchensteam.com www.fuchensteam.com

Saturated steam characteristics table

Pressure bar		Temperature ℃	Enthalpy			Steam specific volume m³/kg
			Sensible heat KJ/kg	Latent heat KJ/kg	Total heat KJ/kg	
0.3		69.10	289.23	2336.1	2625.3	5.229
0.5		81.33	340.49	2305.4	2645.9	3.240
0.75	Absolute pressure	91.78	384.39	2278.6	2663.0	2.217
0.95		98.2	411.43	2261.8	2673.2	1.777
1.00		99.63	417.51	2257.9	2675.4	1.694
0	Gauge pressure	100.0	419.06	2257.0	2676.0	1.673
0.10		102.66	430.2	2250.2	2680.2	1.533
0.20		105.10	440.8	2243.4	2684.2	1.414
0.3		107.39	450.4	2237.2	2687.6	1.312
0.40		109.55	459.7	2231.3	2691.0	1.225
0.50		111.61	468.3	2225.6	2693.9	1.149
0.60		113.56	476.4	2220.4	2696.8	1.088
0.70		115.40	484.1	2215.4	2699.5	1.024
0.80		117.14	491.6	2210.5	2702.1	0.971
0.90		118.80	498.9	2205.6	2704.5	0.923
1.00		120.42	505.6	2201.1	2706.7	0.881
1.10		121.96	512.2	2197.0	2709.2	0.841
1.20		123.46	518.7	2192.8	2711.5	0.806
1.30		124.90	524.6	2188.7	2713.3	0.773
1.40		126.28	530.5	2184.8	2715.3	0.743
1.50		127.62	536.1	2181.0	2717.1	0.714
1.60		128.89	541.6	2177.3	2718.9	0.689
1.70		130.13	547.1	2173.7	2720.8	0.665
1.80		131.37	552.3	2170.1	2722.4	0.643
1.90		132.54	557.3	2166.7	2724.0	0.622
2.00		133.69	562.2	2163.3	2725.5	0.603
2.20		135.88	571.7	2156.9	2728.6	0.568
2.40		138.01	580.7	2150.7	2731.4	0.536
2.60		140.00	589.2	2144.7	2733.9	0.509
2.80		141.92	597.4	2139.0	2736.4	0.483
3.00		143.75	605.3	2133.4	2738.7	0.461
3.20		145.46	612.9	2128.1	2741.0	0.440
3.40		147.2	620.0	2122.9	2742.9	0.422
3.60		148.84	627.1	2117.8	2744.9	0.405
3.80		150.44	634.0	2112.9	2746.9	0.389
4.00		151.96	640.7	2108.1	2748.8	0.374
4.50		155.55	656.3	2096.7	2753.0	0.342
5.00		158.92	670.9	2086.0	2756.9	0.315
5.50		162.08	684.6	2075.7	2760.3	0.292
6.00		165.04	697.5	2066.0	2763.5	0.272
6.50		167.83	709.7	2056.8	2766.5	0.255
7.00		170.50	721.4	2047.7	2769.1	0.240
7.50		173.02	732.5	2039.2	2771.7	0.227
8.00		175.43	743.1	2030.9	2774.0	0.215
8.50		177.75	753.3	2022.9	2776.2	0.204
9.00		179.97	763.0	2015.1	2778.1	0.194
9.50		182.10	772.5	2007.5	2780.0	0.185
10.00		184.13	781.6	2000.1	2781.7	0.177

Design, materials, weights, and performance specifications are approximate and subject to change without notice. Please contact us for the latest information.

Fuchen intelligent Equipment (Hangzhou) Co., Ltd.
Tel:0571-82917716 Fax:0571-82917706
E-mail:fuchen@fuchensteam.com www.fuchensteam.com

Saturated steam characteristics table

Pressure	Temperature ℃	Enthalpy			Steam specific volume m³/kg
bar		Sensible heat KJ/kg	Latent heat KJ/kg	Total heat KJ/kg	
10.50	186.05	790.1	1993.0	2783.3	0.171
11.00	188.02	798.8	1986.0	2784.8	0.163
11.50	189.82	807.1	1979.1	2786.3	0.157
12.00	191.68	815.1	1972.5	2787.6	0.151
12.50	193.43	822.9	1965.4	2788.8	0.148
13.00	195.10	830.4	1959.6	2790.0	0.141
13.50	196.62	837.9	1953.2	2791.1	0.136
14.00	198.35	845.1	1947.1	2792.2	0.132
14.50	199.92	852.1	1941.0	2793.1	0.128
15.00	201.45	859.0	1935.0	2794.0	0.124
15.50	202.92	865.7	1928.8	2794.9	0.119
16.00	204.38	872.3	1923.4	2795.7	0.117
17.00	207.17	885.0	1912.1	2797.1	0.110
18.00	209.90	897.2	1901.3	2798.5	0.105
19.00	212.47	909.0	1890.5	2799.5	0.100
20.00	214.96	920.3	1880.2	2800.5	0.0994
21.00	217.35	931.3	1870.1	2801.4	0.0906
22.00	219.65	941.9	1860.1	2802.0	0.0868
23.00	221.85	952.2	1850.4	2802.6	0.0832
24.00	224.02	962.2	1840.9	2803.1	0.0797
25.00	226.12	972.1	1831.4	2803.5	0.0768
26.00	228.15	981.6	1822.2	2803.8	0.0740
27.00	230.14	990.7	1818.3	2804.0	0.0714
28.00	232.05	999.7	1804.4	2804.1	0.0689
29.00	233.93	1008.6	1795.6	2804.2	0.0666
30.00	235.78	1017.0	1787.0	2804.1	0.0645
31.00	237.55	1025.6	1778.5	2804.1	0.0625
32.00	239.28	1033.9	1770.0	2803.9	0.0605
33.00	240.97	1041.9	1761.8	283.7	0.0587
34.00	242.63	1049.7	1753.8	2803.5	0.0571
35.00	244.26	1057.7	1745.5	2803.2	0.0554
36.00	245.86	1065.7	1737.2	2802.9	0.0539
37.00	247.42	1072.9	1729.5	2802.4	0.0524
38.00	248.95	1080.3	1721.6	2801.9	0.0510
39.00	250.42	1087.4	1714.1	2801.5	0.0498
40.00	251.94	1094.6	1706.3	2800.9	0.0485
41.00	253.34	1101.6	1698.3	2799.9	0.0473
42.00	254.74	1108.6	1691.2	2799.8	0.0461
43.00	256.12	1115.4	1683.7	2799.1	0.0451
44.00	257.50	1122.1	1676.2	2798.3	0.0441
45.00	258.82	1128.7	1668.9	2797.6	0.0431
46.00	260.13	1135.3	1666.6	2796.9	0.0421
47.00	261.43	1142.2	1654.5	2796.6	0.0412
48.00	262.73	1148.1	1647.1	2795.2	0.0403
49.00	264.00	1154.5	1639.9	2794.4	0.0394
50.00	265.26	1160.8	1632.8	2793.6	0.0386

Fuchen intelligent Equipment (Hangzhou) Co., Ltd.
Tel:0571-82917716 Fax:0571-82917706
E-mail:fuchen@fuchensteam.com www.fuchensteam.com

Saturated steam flow rate in pipeline at given flow rate (theoretical calculated value)

Flow-kg/h																
P bar	V m/s	Pipeline diameter(mm)														
		15	20	25	32	40	50	65	80	100	125	150	200	250	300	400
1	15	11	19	30	49	77	120	203	308	481	752	1083	1925	3007	4330	7699
	20	14	26	40	66	103	160	271	411	642	1002	1443	2566	4010	5774	10265
	25	18	32	50	82	128	200	339	513	802	1253	1804	3208	5012	7217	12831
	30	22	38	60	99	154	241	407	616	962	1504	2165	3849	6014	8661	15397
	40	29	51	80	131	205	321	542	821	1283	2005	2887	5132	8019	11548	20529
2	15	16	28	44	72	112	176	297	450	703	1098	1582	2812	4394	6327	11248
	20	21	37	59	96	150	234	396	600	937	1465	2109	3749	5858	8436	14997
	25	24	67	73	120	187	293	495	750	1172	1831	2636	4687	7323	10545	18746
	30	32	56	88	144	225	351	594	900	1406	2197	3163	5624	8787	12654	22496
	40	42	75	117	192	300	469	792	1200	1875	2929	4218	7499	11716	16872	29994
3	15	21	37	57	94	147	230	388	588	920	1437	2069	3678	5747	8276	14712
	20	28	49	77	126	196	307	518	785	1226	1916	2709	4904	7663	11034	19616
	25	34	61	96	157	245	383	647	981	1533	2395	3448	6130	9578	13793	24521
	30	41	74	115	188	294	460	777	1177	1839	2874	4138	7356	11494	16551	29425
	40	55	98	153	251	392	613	1036	1569	2452	3831	5517	9808	15325	22059	39233
4	15	26	45	71	116	181	283	479	725	1133	1771	2550	4534	7084	10201	18135
	20	34	60	94	155	242	378	638	967	1511	2361	3400	6045	9445	13601	24180
	25	43	76	118	193	302	472	798	1209	1889	2952	4250	7556	11806	17001	30225
	30	51	91	142	232	363	567	958	1451	2267	3542	5100	9067	14168	20402	36270
	40	68	121	189	309	484	756	1277	1934	3022	4723	6801	12090	18890	27202	48359
5	15	30	54	84	138	215	336	569	861	1346	2103	3028	5383	8411	12111	21531
	20	40	72	112	184	287	449	758	1148	1794	2804	4037	7177	11214	16149	28709
	25	50	90	140	230	359	561	948	1435	2243	3506	5046	8971	14018	20186	35886
	30	61	108	168	276	431	673	1137	1723	2691	4205	6056	10766	16821	24223	43063
	40	81	144	224	367	574	897	1516	2297	3589	5607	8074	14354	22429	32297	57417
6	15	35	62	97	160	249	390	658	997	1558	2435	3507	6237	9740	14026	24935
	20	47	83	130	213	332	519	878	1330	2078	3247	4675	8312	12987	18701	33247
	25	58	104	162	266	416	649	1097	1662	2597	4058	5844	10390	16234	23377	41559
	30	70	125	195	319	49	779	1317	1995	3117	4870	7013	12468	19481	28052	49871
	40	94	166	260	426	665	1039	1756	2660	4156	6494	9351	16624	25974	37403	66494
7	15	40	71	110	181	283	442	746	1130	1766	2760	3974	7065	11039	15896	28260
	20	53	94	147	241	377	589	995	1507	2355	3680	5299	9420	14719	21195	37680
	25	66	118	184	301	471	736	1244	1884	2944	4600	6623	11775	18398	26494	47100
	30	79	141	221	362	565	883	1492	2261	3533	5520	7948	14130	22078	31793	56520
	40	106	188	294	482	754	1178	1990	3014	4710	7359	10598	18840	29438	42390	75360
8	15	44	79	123	202	315	493	833	1262	1972	3081	4436	7887	12323	17745	31546
	20	59	105	164	269	421	657	1111	1682	2629	4108	5915	10515	16430	23660	42061
	25	74	131	205	336	526	822	1388	2103	3286	5134	7394	13144	20538	29574	52577
	30	89	158	246	404	631	986	1666	2524	3943	6161	8872	15773	24645	35489	63092
	40	118	210	329	538	841	1314	2221	3365	5258	8215	11830	21031	32860	47319	84123

Design, materials, weights, and performance specifications are approximate and subject to change without notice. Please contact us for the latest information.

Fuchen intelligent Equipment (Hangzhou) Co., Ltd.
Tel:0571-82917716 Fax:0571-82917706
E-mail:fuchen@fuchensteam.com www.fuchensteam.com

Saturated steam flow rate in pipeline at given flow rate (theoretical calculated value)

Flow-kg/h																
P bar	V m/s	Pipeline diameter(mm)														
		15	20	25	32	40	50	65	80	100	125	150	200	250	300	400
9	15	49	87	137	224	350	546	923	1398	2185	3414	4916	8740	13657	19665	34961
	20	66	117	182	298	466	728	1231	1865	2913	4552	6555	11654	18209	26221	46614
	25	82	146	228	373	583	910	1539	2331	3642	5690	8194	14567	22761	32776	58268
	30	98	175	273	447	699	1093	1846	2797	4370	6828	9833	17480	27313	39331	69922
	40	131	233	364	597	932	1457	2462	3729	5827	9104	13110	23307	36418	52441	93229
10	15	54	96	150	245	383	599	1012	1533	2395	3742	5389	9580	14968	21554	38319
	20	72	128	200	327	511	798	1349	2044	3193	4989	7185	12773	19958	28739	51092
	25	90	160	249	409	639	998	1686	2555	3992	6237	8981	15966	24940	35924	63864
	30	108	192	299	490	766	1197	2024	3065	4790	7484	10777	19159	29936	43108	76637
	40	144	255	399	654	1022	1597	2698	4087	6386	9979	14369	25546	39915	57478	102183
11	15	59	104	163	263	416	650	1099	1664	2601	4063	5851	10402	16254	23406	41610
	20	78	139	217	351	555	867	1465	2219	3467	5418	7802	13870	21672	31207	55480
	25	98	173	271	438	693	1084	1831	2774	4334	6772	9752	17337	24090	39009	69350
	30	117	208	325	526	832	1300	2198	3329	5201	8127	11703	20805	32508	46811	83220
	40	156	277	433	702	1110	1734	2930	4438	6935	10836	15604	27740	43344	62415	110960
12	15	64	115	179	287	458	716	1210	1833	2864	4475	6444	11457	17901	25778	45827
	20	86	153	239	383	611	955	1613	2444	3819	5967	8593	15246	23868	34370	61103
	25	107	191	298	449	764	1193	2017	3055	4474	7459	10741	19095	29835	42963	76378
	30	129	229	358	575	917	1432	2420	3666	5728	8951	12889	22914	35802	51555	91654
	40	172	306	477	767	1222	1909	3227	4888	7638	11934	17185	30551	47736	68741	122205
13	15	68	120	188	308	481	752	1270	1924	3006	4697	6764	12026	18790	24057	48102
	20	90	160	251	410	641	1002	1694	2565	4009	6263	9019	16034	25053	36077	64136
	25	113	200	313	513	802	1253	2117	3207	5011	7829	11274	20043	31316	45096	80170
	30	135	241	376	616	962	1503	2540	3848	6013	9395	13529	24051	37580	54115	96204
	40	180	321	501	821	1283	2004	3387	5131	8017	12527	18038	32068	50106	72153	128272
14	15	75	132	207	329	530	828	1399	2120	3312	5175	7451	13247	20698	29805	52988
	20	99	177	276	438	707	1104	1866	2826	4416	6899	9935	17663	27598	39741	70650
	25	124	221	345	548	883	1380	2332	3533	5520	8624	12419	22078	34497	49676	88313
	30	149	265	414	658	1060	1656	2798	4239	6623	10349	14903	26494	41396	59611	105975
	40	199	353	552	877	1413	2208	3731	5652	8831	13799	19870	35325	55195	79481	141300
15	15	77	137	214	350	547	855	1444	2188	3419	5341	7692	13674	21366	30767	54697
	20	103	182	285	467	729	1140	1926	2917	4558	7122	10256	18232	28488	41023	72929
	25	128	228	356	583	912	1424	2407	3646	5698	8902	12820	22790	35610	51278	91161
	30	154	273	427	700	1094	1709	2889	4376	6837	10683	15383	27348	42732	61534	109394
	40	205	365	570	933	1459	2279	3852	5834	9116	14244	20511	36465	56976	82045	145858
16	15	82	145	226	371	580	906	1531	2319	3623	5661	8152	14492	22644	32608	57969
	20	109	193	302	495	773	1208	2041	3092	4831	7548	10869	19323	30192	43477	77292
	25	136	242	377	618	966	1510	2551	3865	6038	9435	13587	24154	37740	54346	96615
	30	163	290	453	742	1159	1812	3062	4638	7246	11322	16304	28985	45288	65215	115938
	40	217	386	604	989	1546	2415	4082	6183	9662	15096	21738	38646	60385	86954	154585

Fuchen intelligent Equipment (Hangzhou) Co., Ltd.
Tel:0571-82917716 Fax:0571-82917706
E-mail:fuchen@fuchensteam.com www.fuchensteam.com

Drawing of drain station

Cylinder drain station

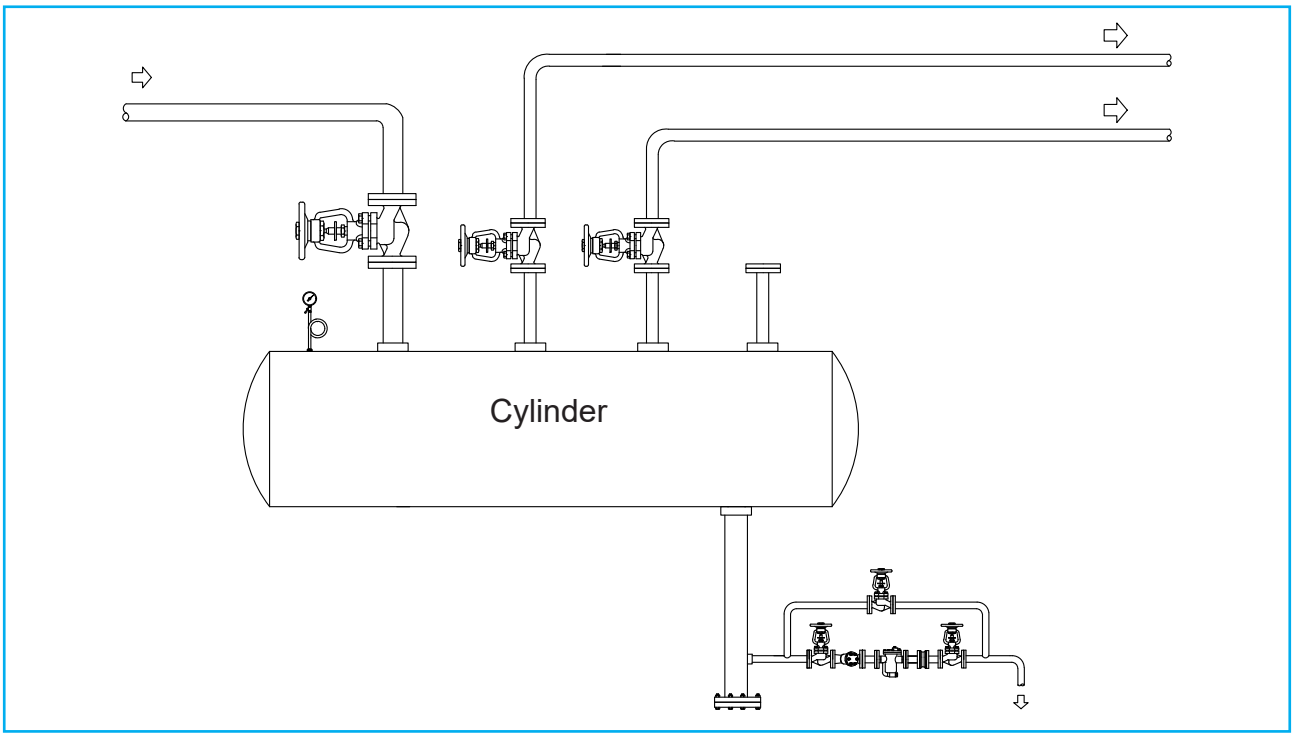

Pipeline end drain station

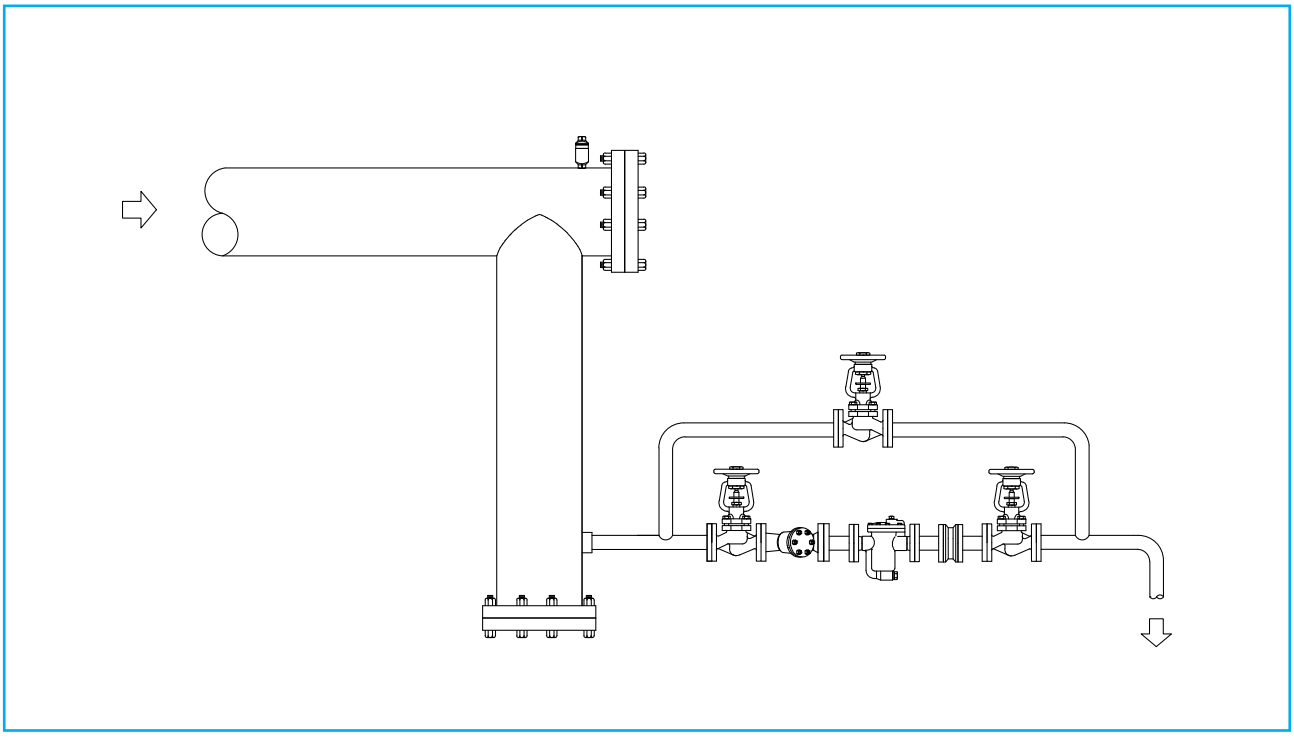

Design, materials, weights, and performance specifications are approximate and subject to change without notice. Please contact us for the latest information.

Fuchen intelligent Equipment (Hangzhou) Co., Ltd.
Tel:0571-82917716 Fax:0571-82917706
E-mail:fuchen@fuchensteam.com www.fuchensteam.com

Drawing of drain station

Pipeline drain station

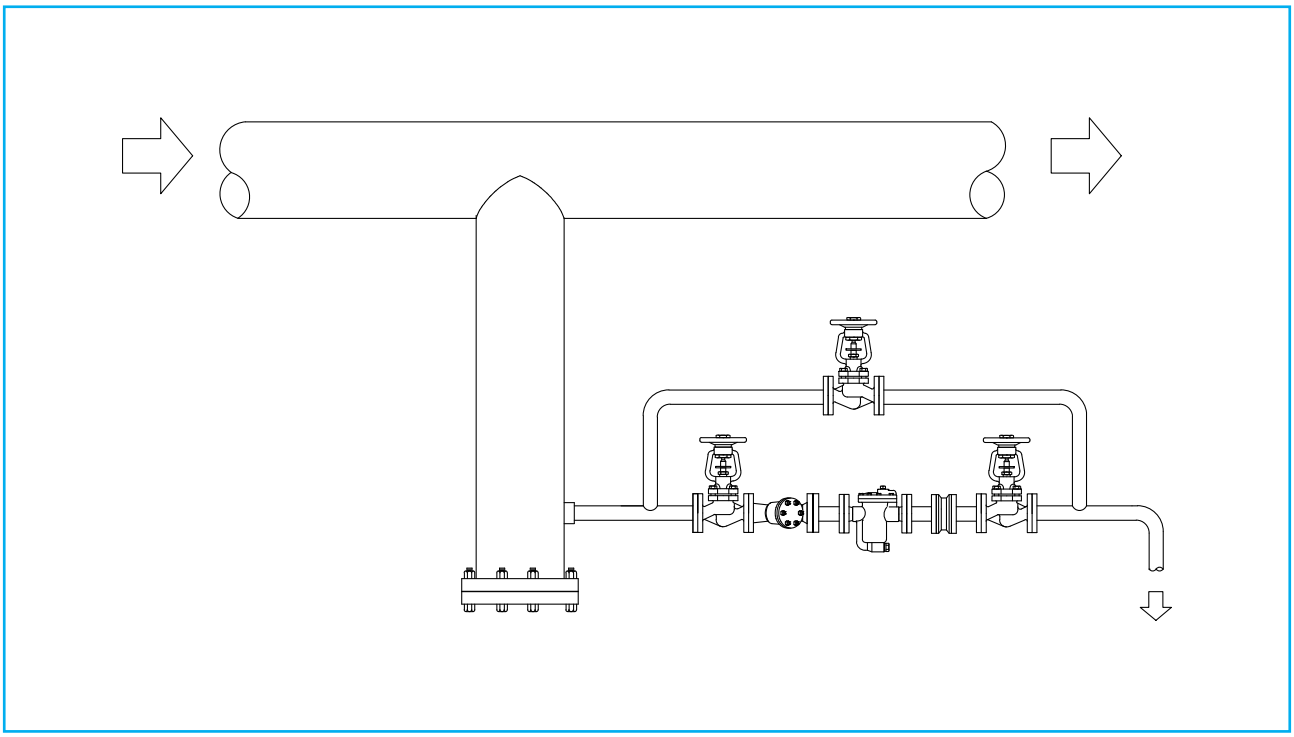

Steam-water separator drain station

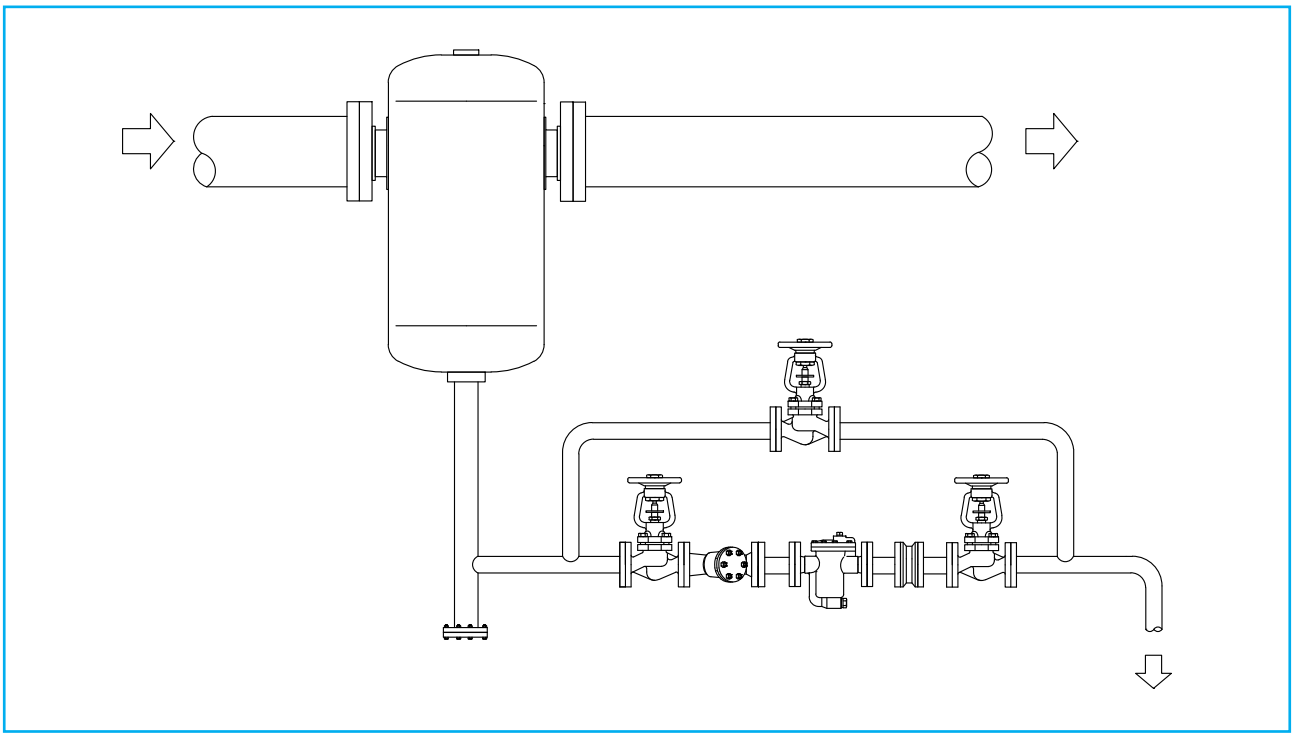

Fuchen intelligent Equipment (Hangzhou) Co., Ltd.
Tel:0571-82917716 Fax:0571-82917706
E-mail:fuchen@fuchensteam.com www.fuchensteam.com

Drawing of drain station

Parallel drain station after equipment

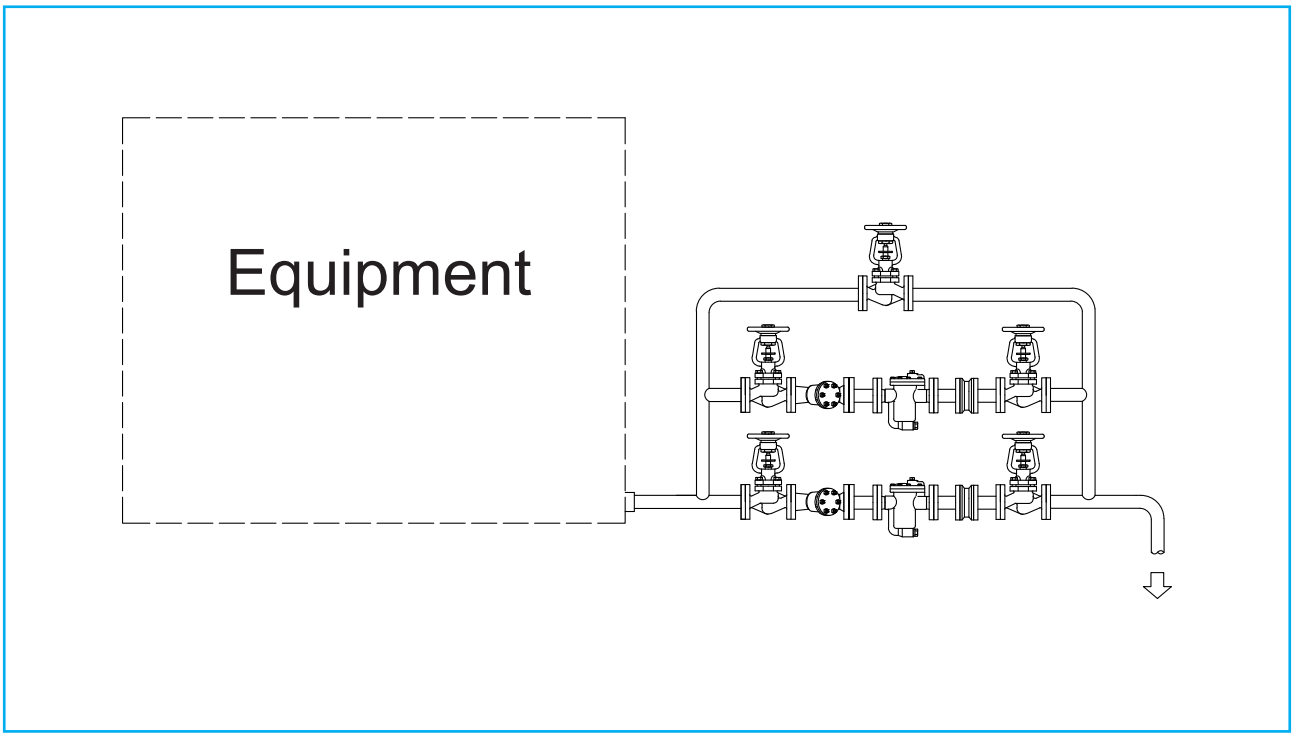

Automatic drain pump system

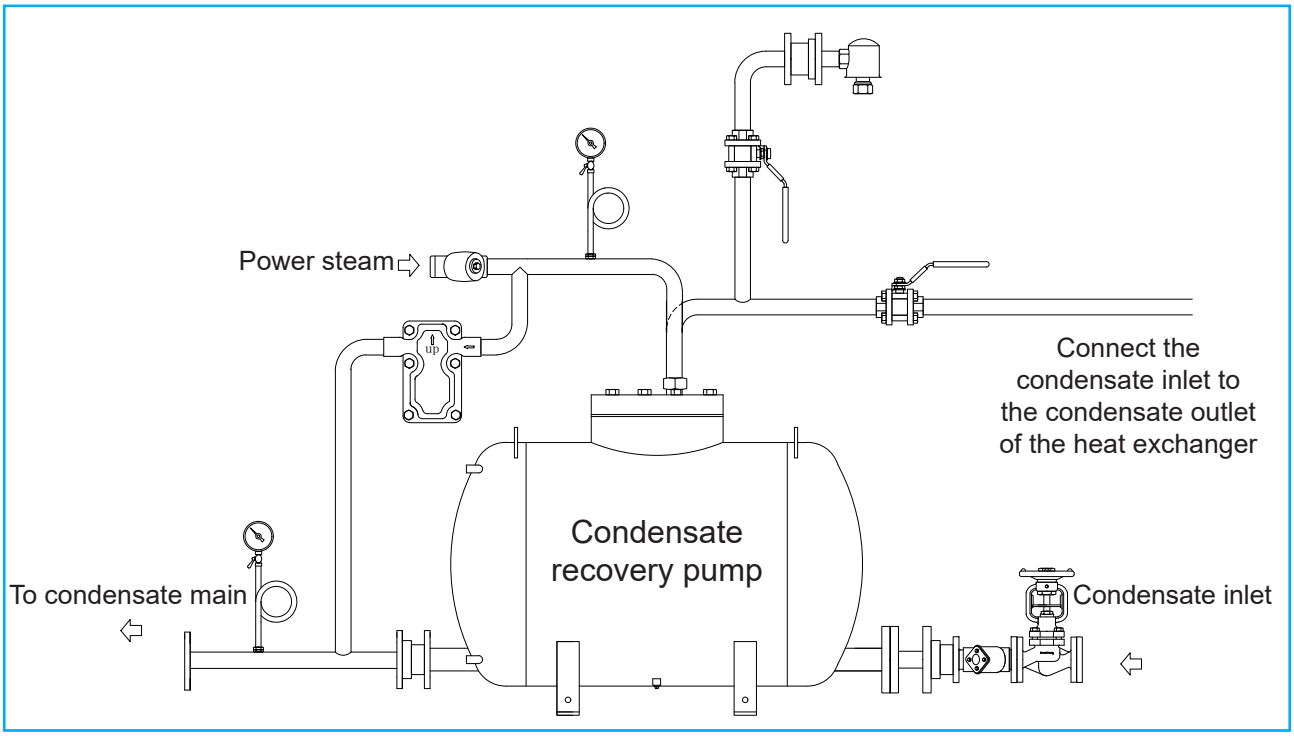

Design, materials, weights, and performance specifications are approximate and subject to change without notice. Please contact us for the latest information.

Fuchen intelligent Equipment (Hangzhou) Co., Ltd.
Tel:0571-82917716 Fax:0571-82917706
E-mail:fuchen@fuchensteam.com www.fuchensteam.com

Drawing of pressure reducing station

Single pressure reducing station

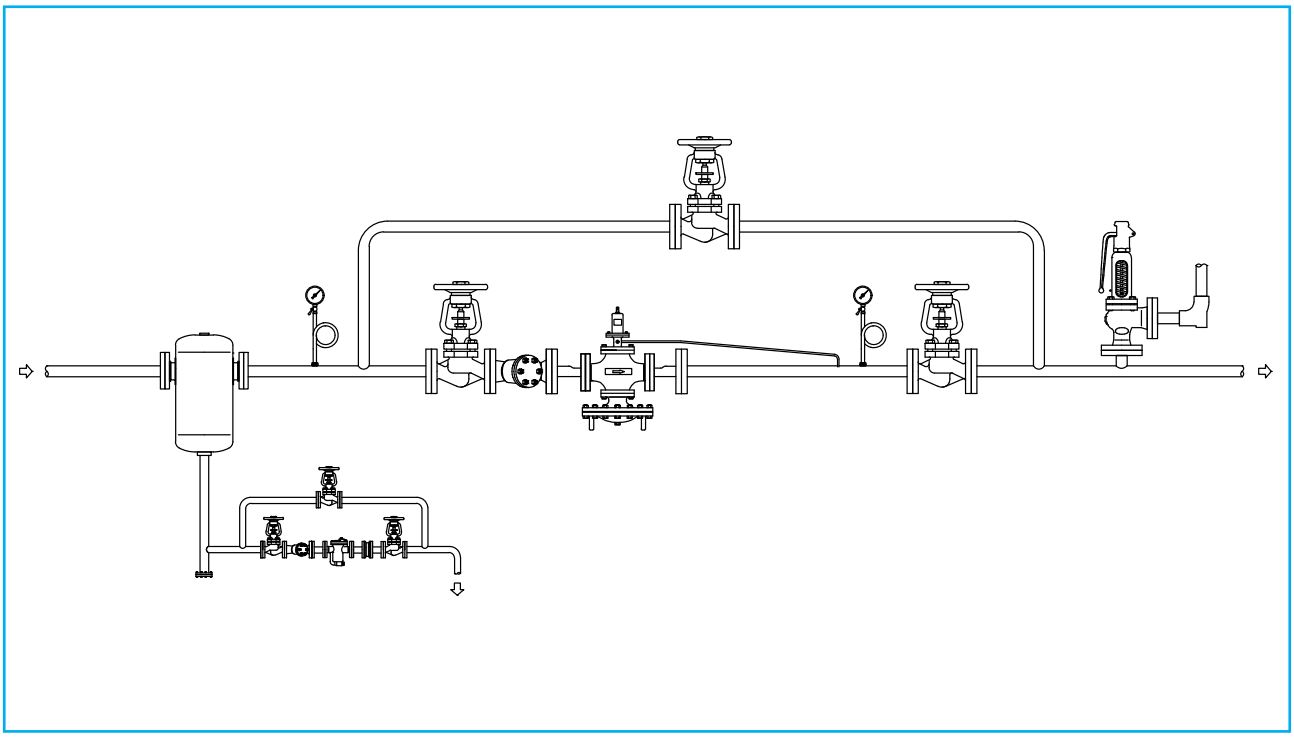

Parallel pressure reducing station

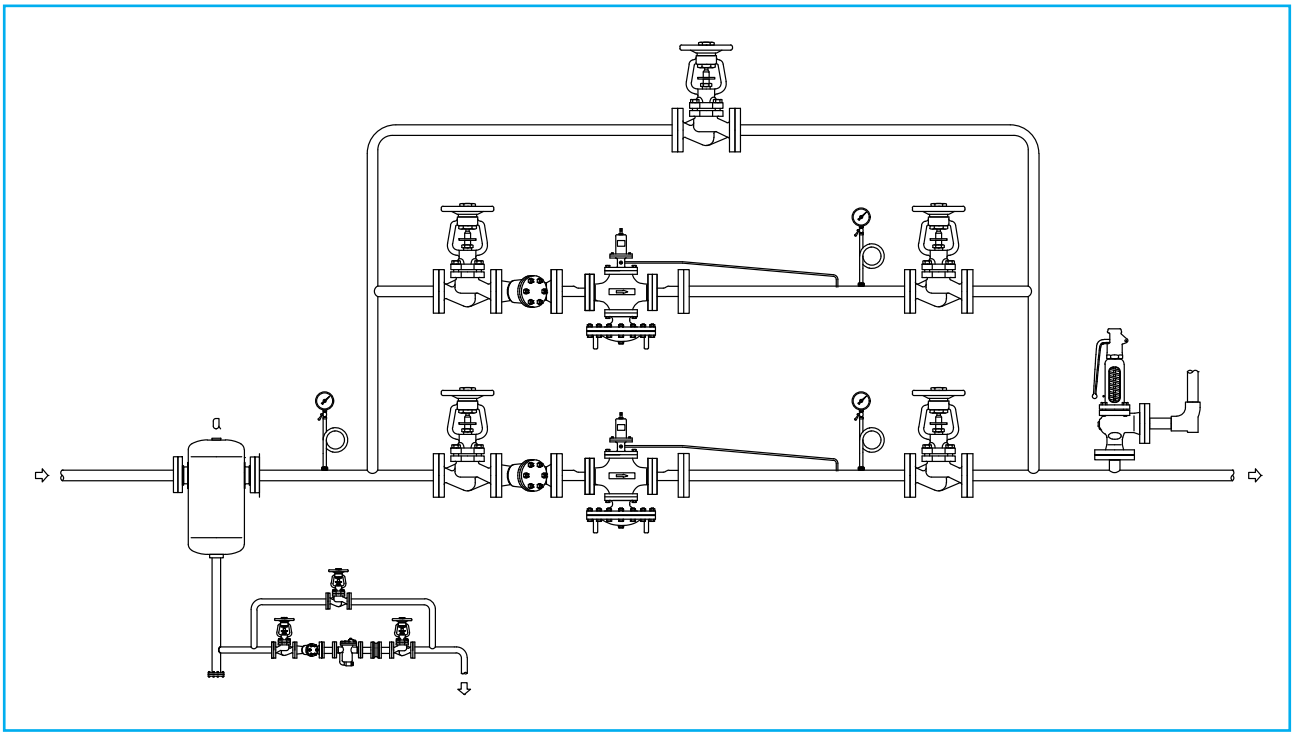

Fuchen intelligent Equipment (Hangzhou) Co., Ltd.
Tel:0571-82917716 Fax:0571-82917706
E-mail:fuchen@fuchensteam.com www.fuchensteam.com

Drawing of pressure reducing station

Series pressure reducing station

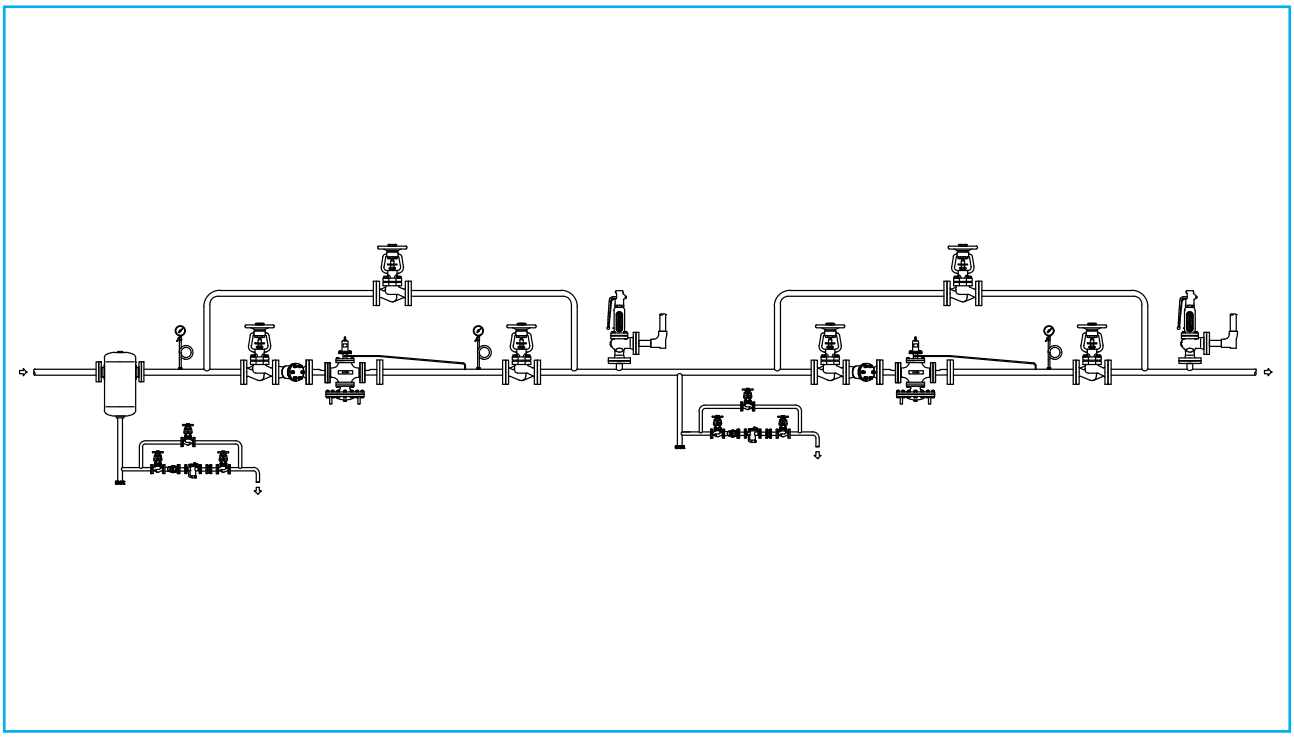

Pneumatic single pressure reducing station

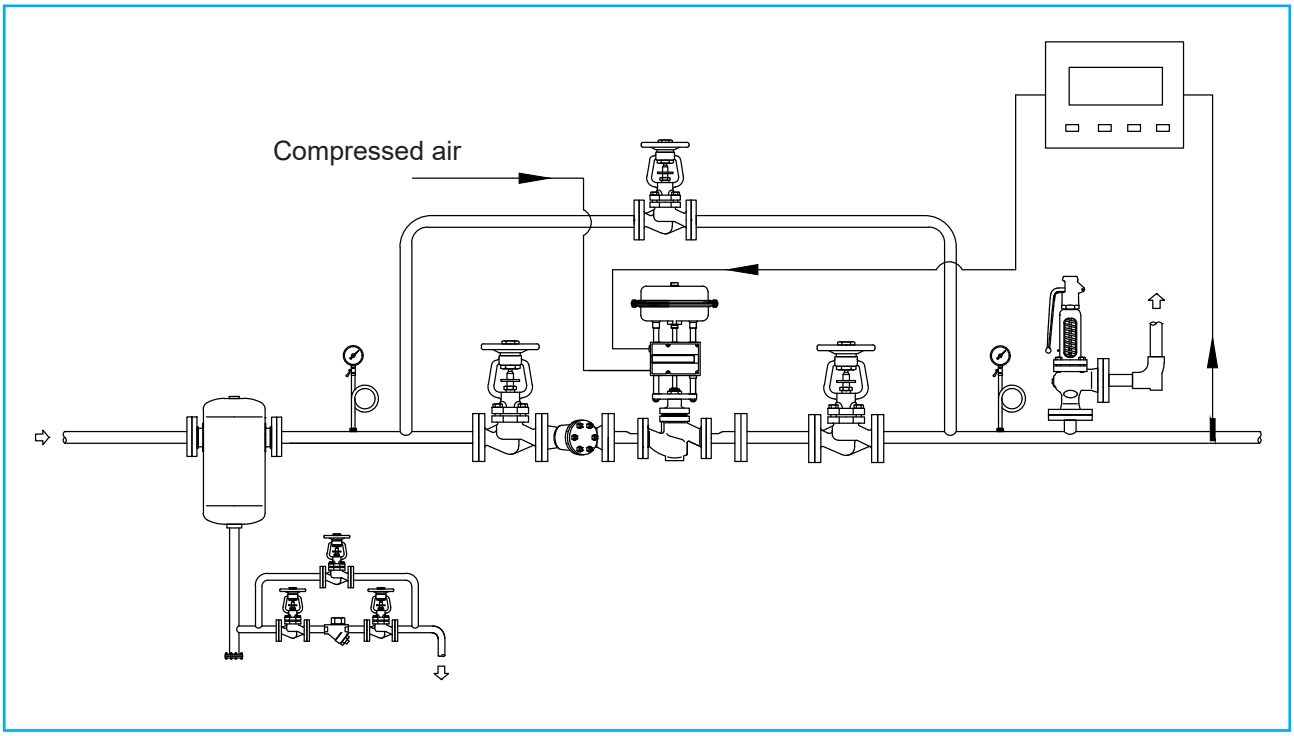

Design, materials, weights, and performance specifications are approximate and subject to change without notice. Please contact us for the latest information.

Fuchen intelligent Equipment (Hangzhou) Co., Ltd.
Tel:0571-82917716 Fax:0571-82917706
E-mail:fuchen@fuchensteam.com www.fuchensteam.com

Drawing of pressure reducing station

Pneumatic parallel pressure reducing station

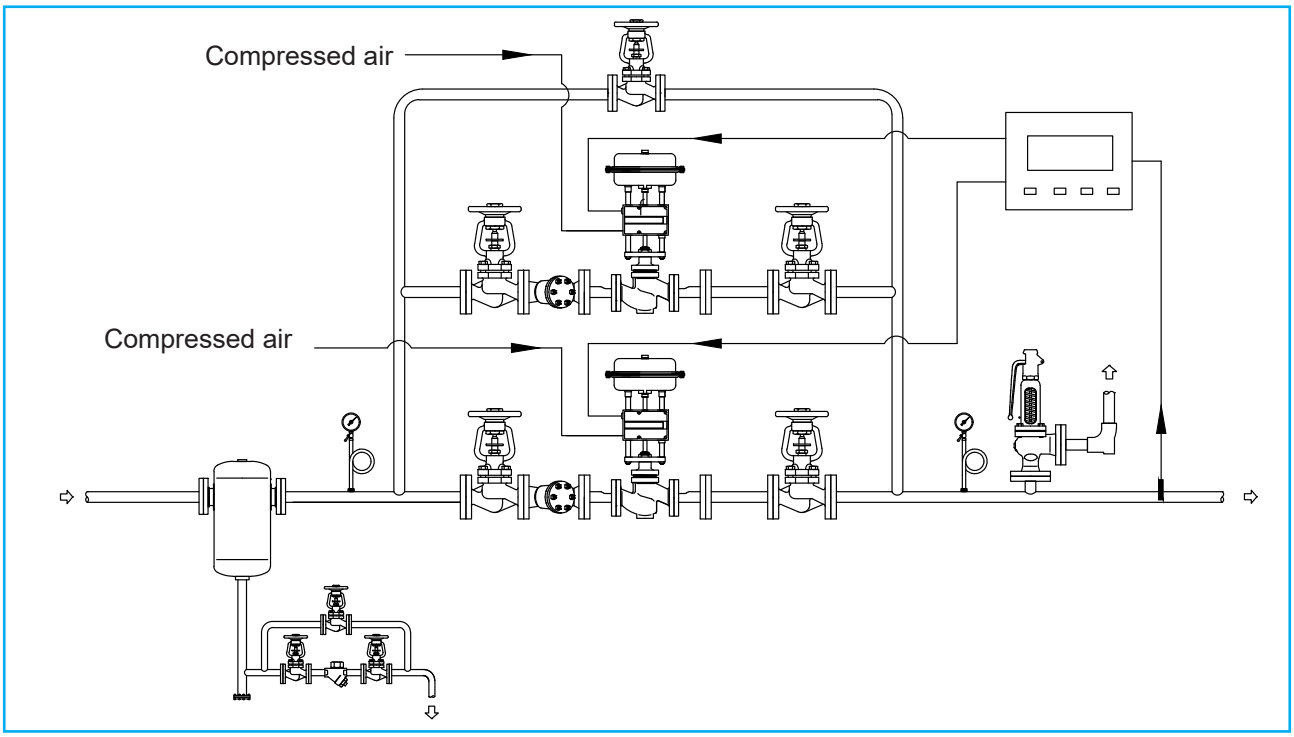

Pneumatic series pressure reducing station

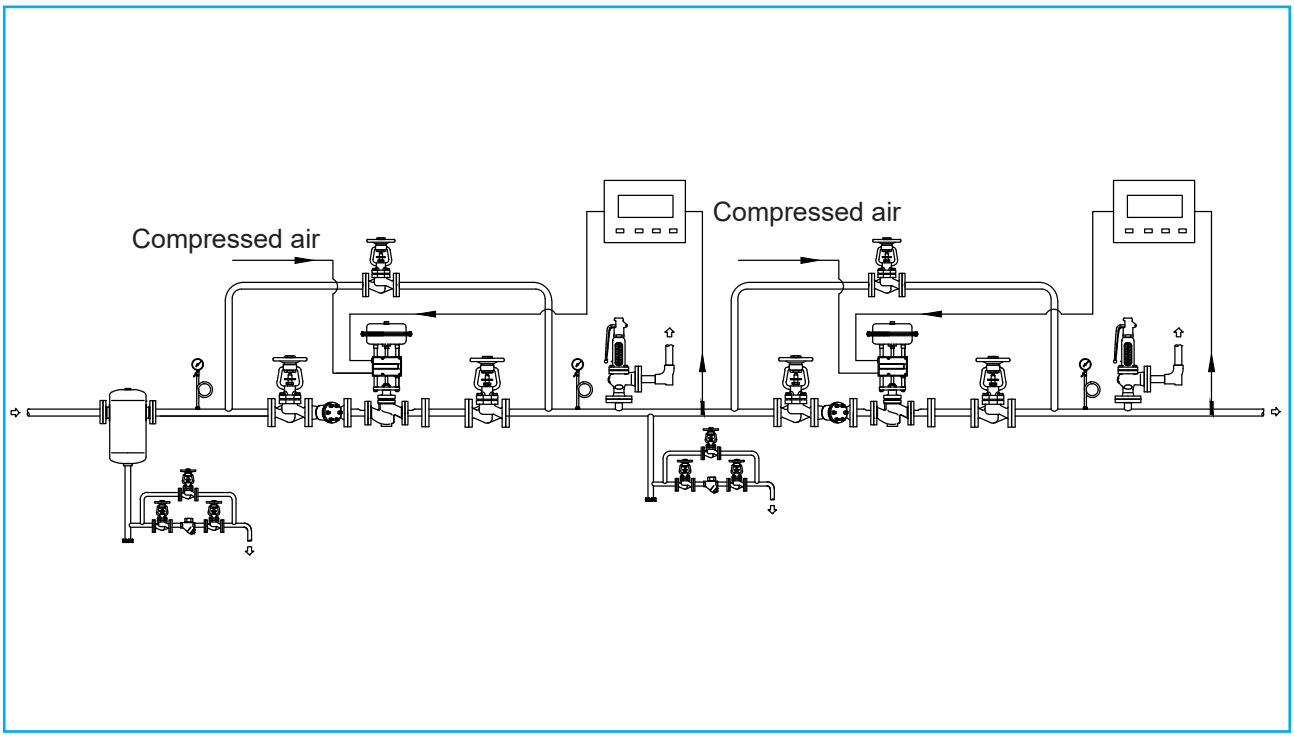

Fuchen intelligent Equipment (Hangzhou) Co., Ltd.
Tel:0571-82917716 Fax:0571-82917706
E-mail:fuchen@fuchensteam.com www.fuchensteam.com

Drawing of pressure reducing station

Plate heat exchanger electric pressure reducing station

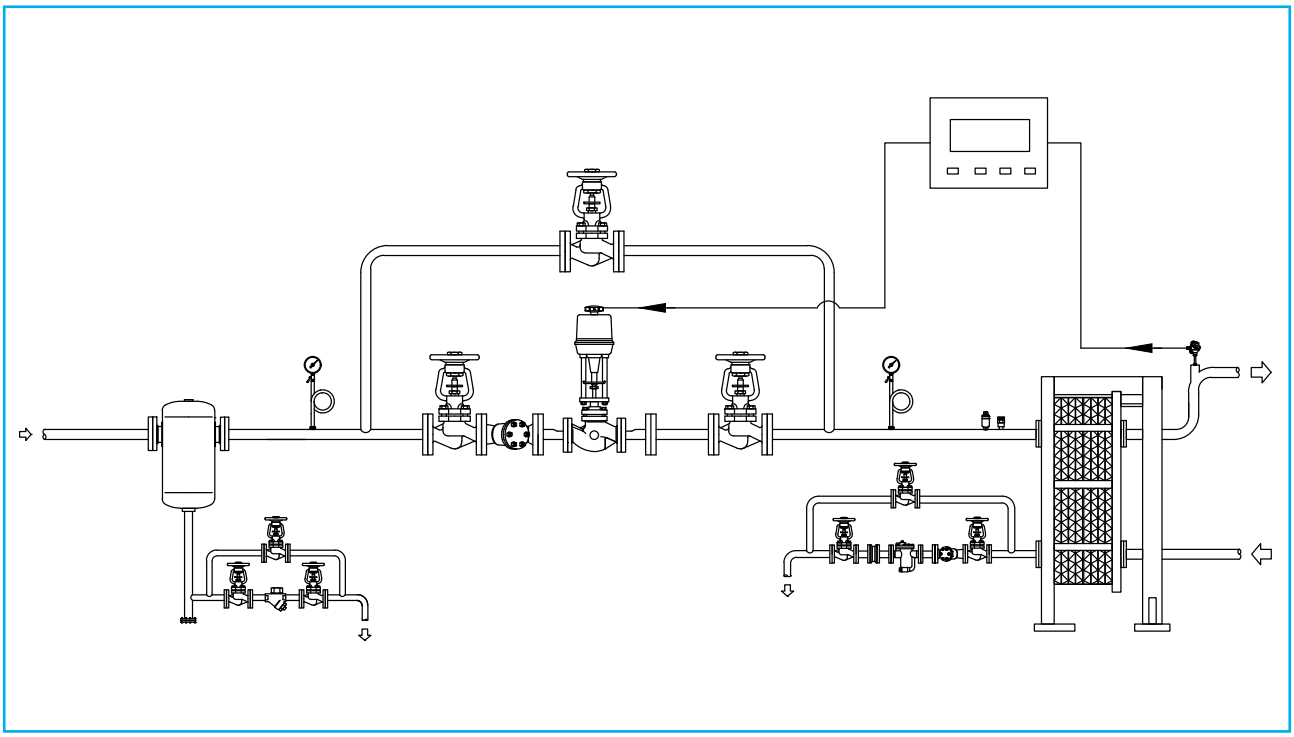

Design, materials, weights, and performance specifications are approximate and subject to change without notice. Please contact us for the latest information.

Fuchen intelligent Equipment (Hangzhou) Co., Ltd.
Tel:0571-82917716 Fax:0571-82917706
E-mail:fuchen@fuchensteam.com www.fuchensteam.com

Drawing of temperature and pressure reducing device

Temperature and pressure reducing device

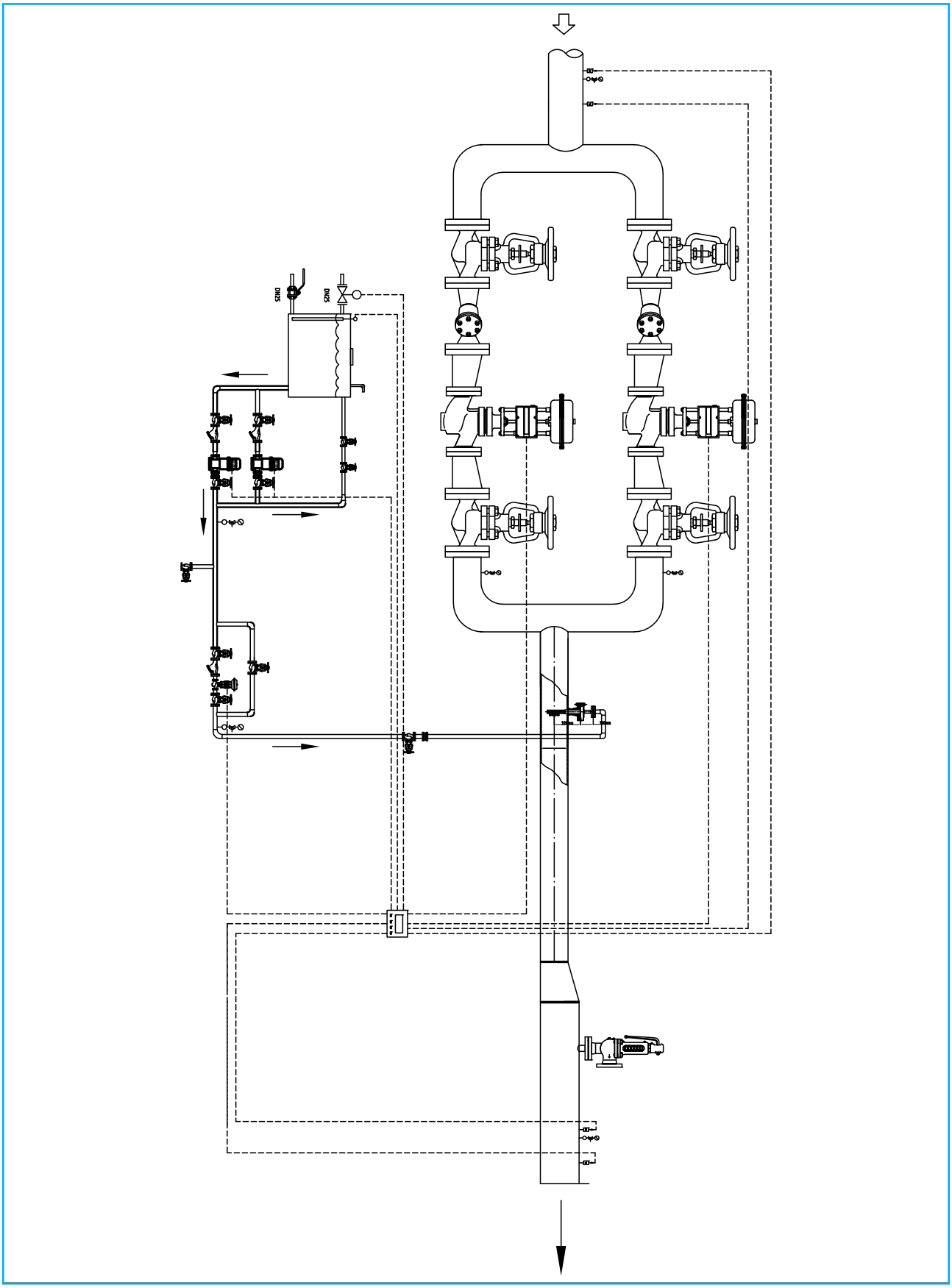

Fuchen intelligent Equipment (Hangzhou) Co., Ltd.
Tel:0571-82917716 Fax:0571-82917706
E-mail:fuchen@fuchensteam.com www.fuchensteam.com

Unit conversion

Pressure	1bar=14.5psi
Weight	1kg=2.2Lbs
Length	1in=25.4mm
Flow	1Lbs/hr=0.454kg/hr
	1gmp=3.785L/m
	1scfm=1.699m³/hr
Temperature	1.8×℃ +32= ℉

Design, materials, weights, and performance specifications are approximate and subject to change without notice. Please contact us for the latest information.

Fuchen intelligent Equipment (Hangzhou) Co., Ltd.
Tel:0571-82917716 Fax:0571-82917706
E-mail:fuchen@fuchensteam.com www.fuchensteam.com

Fuchen intelligent Equipment (Hangzhou) Co., Ltd.
Tel:0571-82917716 Fax:0571-82917706
E-mail:fuchen@fuchensteam.com www.fuchensteam.com



Fuchen intelligent Equipment (Hangzhou) Co., Ltd.
Address: Room 502, Jinjun Building, No. 341 Shuixiang Road, Shangcheng District, Hangzhou, Zhejiang Province
Tel: 0571-82917716
Fax: 0571-82917706
Website: www.fuchensteam.com
E-mail: fuchen@fuchensteam.com